Ascenda size "S" elevator specifications

General:

- Travel: xxx
- Overhead: xxx
- Speed: 0.15m/s
- Load capacity: 350kg
- Stops: two
- Single opening (B side)

Car features:

- 700mm x 600mm car size
- 1999mm interior car height
- White/black texture powder coated cab with clear laminated safety glass vision panels
- 2 handrails (no integrated controls)
- Black car accent strip
- Charcoal forgo flooring
- Energy saving recessed led light with silver trim rings
- 1990mm clear laminated safety glass saloon doors

Fixtures:

- Black acrylic car operating panel (cop) with with integrated keypad phone and status display, up/down arrow buttons, and alarm button
- Silver aluminum handrail with controls, up/down arrow buttons, door open button, in car emergency stop button and fan knob
- Wireless hall stations with up/down arrow buttons and door open button

Mechanical equipment:

- Modular extruded aluminum rail structure
- Car frame assembly
- 24 mm pitch screw drive system
- Integrated frequency inverter drive synchronous motor

Electrical:

- 1PH, 208V - 240V, 50/60HZ, 32A

Safety devices:

- Safety nut
- Belt monitor
- One upper and one lower final limits
- In-car emergency stop switch and alarm
- Car door locking device for car gate(s)
- Battery back up emergency car light and alarm
- Top car obstruction safety device
- Bottom car obstruction safety device
- Hatch obstruction safety device
- Battery lowering system
- Overload sensor
- Manual lowering device

Controls:

- Hold to run
- Self diagnostic system with diagnostic led

Optional included features:

- Iot module - wi-fi and sim card
- Embedded tower led light strip
- Integrated fan
- Mirror finish ceiling
- Control buttons - dual color
- Accent car panel with recessed light
- Control box location: a side/c side/remote (2 bends maximum)

TITLE: ASCENDA TFL-S			SCALE: NONE
DRAWN BY: DRAWN_BY	DATE: DRAWN_DATE	DRAWING NO.: DRAWING_NO	REV: REV_NO
JOB INFORMATION: JOB_REFERENCE JOB_ADDRESS JOB_CITY_ST_ZIP			

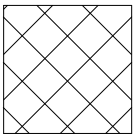

Section force (include rated load): 12918 (N)
Section area: 0.24 m²
Force per square meter: 53825 (N/m²)

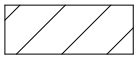

Note:
If a framework contractor is used, the external dimensions will increase by 6mm,
Construction needs to be adjusted according to the actual situation to meet the tolerance of+/-3mm for finished openings, squares, and dimensions

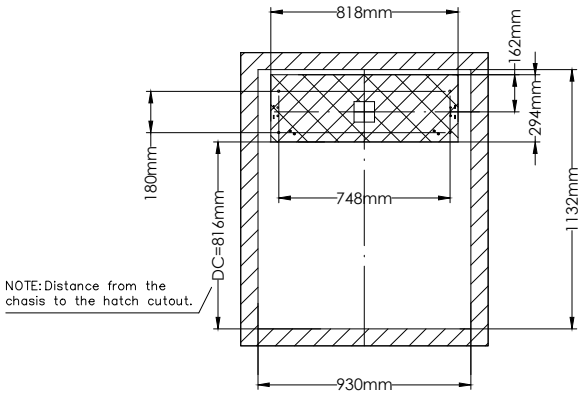

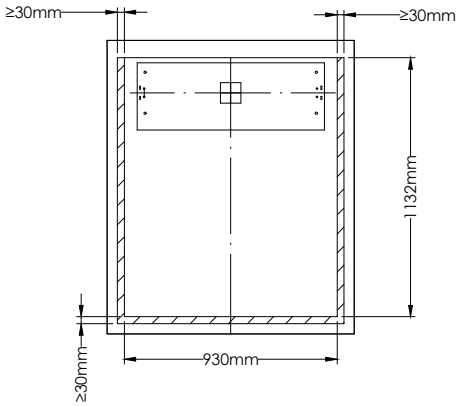

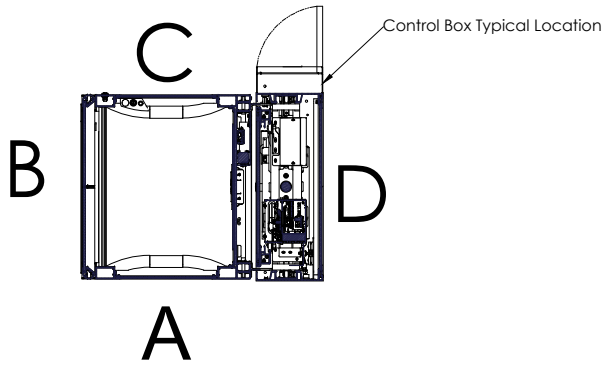

* The hatch flange will rest on the upper landing finished floor.

Crash warning: to ensure unobstructed operation, no items such as floor or ceiling trim, pictures, window sill, etc, should be in the area of the elevator or hatch flange. We recommend at least 1" from any obstruction to the hatch flange.

TITLE: ASCENDA TFL-S			SCALE: NONE
DRAWN BY: DRAWN_BY	DATE: DRAWN_DATE	DRAWING NO.: DRAWING_NO	REV: REV_NO
JOB INFORMATION: JOB_REFERENCE JOB_ADDRESS JOB_CITY_ST_ZIP			

REVISION HISTORY				
ZONE	REV	DESCRIPTION	DATE	APPROVED
1	A	4-M8->2-M8	2025/11/26	Andy

Walls of bricks, terra-cotta, hollow blocks,and similar materials shall not be used for attachment of guide-rail brackets unless ,they are adequately reinforced.pull out force 1300N

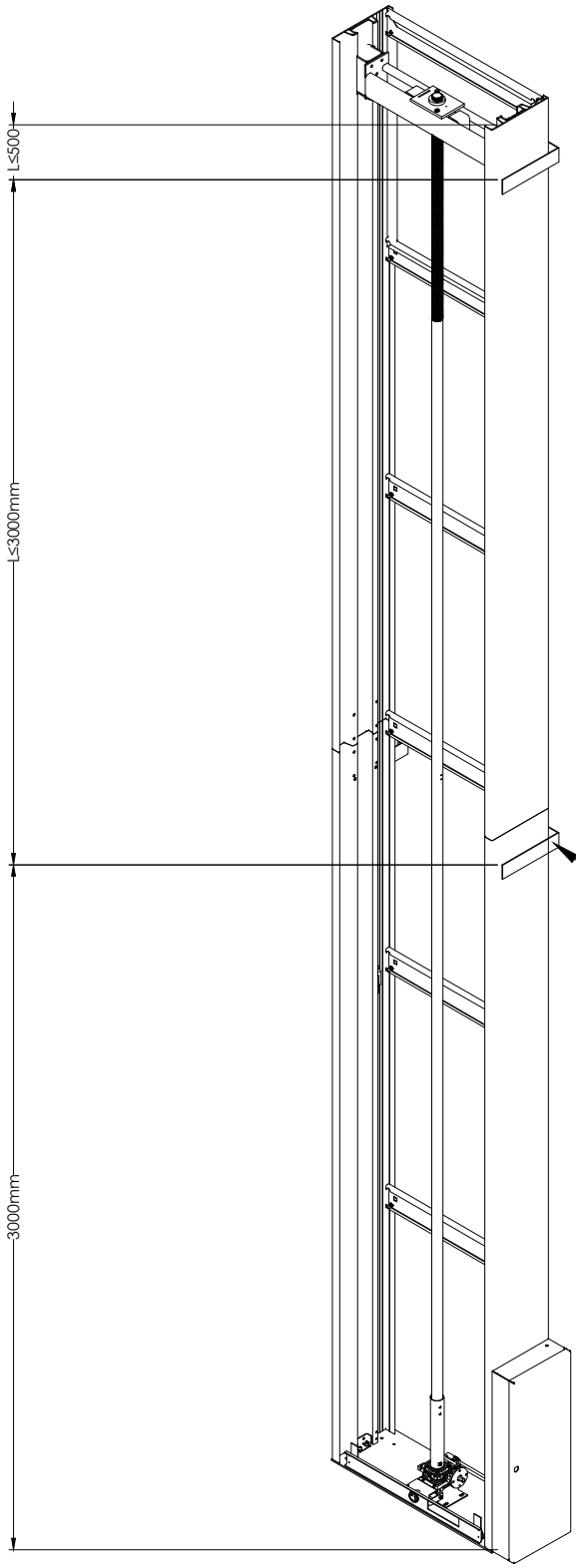

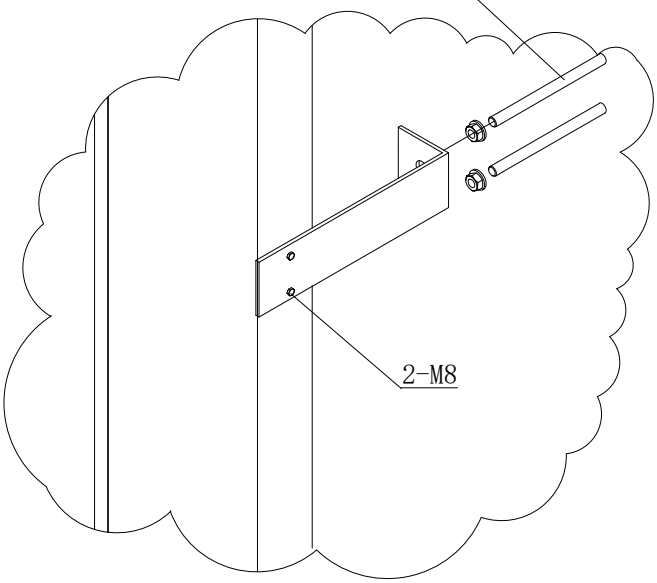

A

1300N in total per side,
2600N per fixing area
See detail A

TITLE ASCENDA TFL-S			SCALE
DRAWN BY	DATE	DRAWING NO.	REV A
JOB INFORMATION			

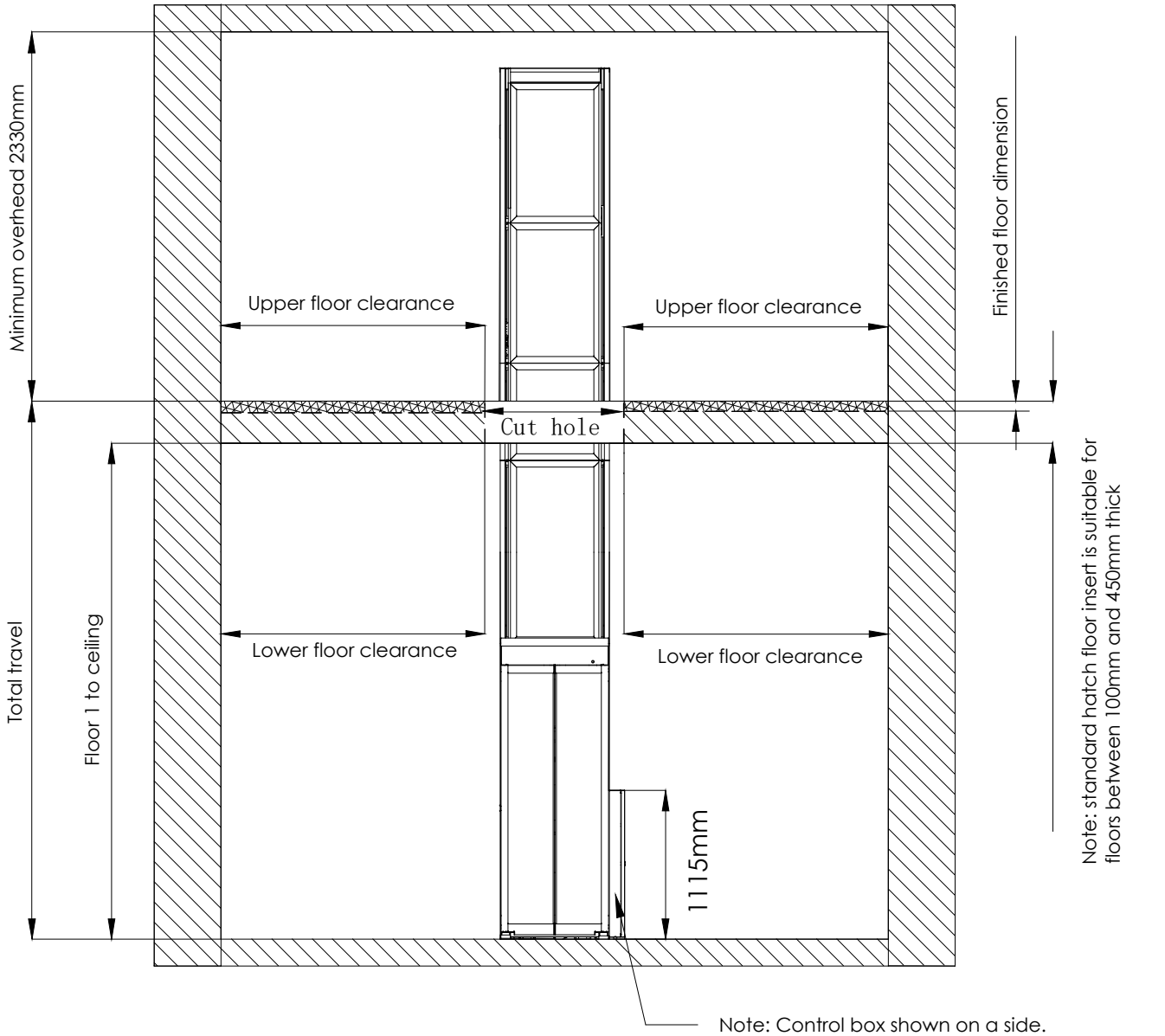

Note: Control box shown on a side.
Standard tower mounted controller requires a minimum lower floor area clearance of 920mm on control box side.

Job specific information:

	OVERHEAD
	TOTAL TRAVEL FLOOR 1 TO 2

Notes:

1) Consult local authority to ensure compliance with state and local codes.
2) Maximum travel is 4270mm
3) Minimum floor 1 to ceiling measurement is 2150mm
4) Upper floor clearance is 40mm - 100 or greater than 300mm
5) Lower floor clearance is 19mm - 100mm or greater than 300mm
6) Overhead notes:
   - Minimum overhead is 2330mm with standard equipment
   - Engineering review is required if overhead exceeds 2550mm

TITLE: ASCENDA TFL-S			SCALE: NONE
DRAWN BY: DRAWN_BY	DATE: DRAWN_DATE	DRAWING NO.: DRAWING_NO	REV: REV_NO
JOB INFORMATION: JOB_REFERENCE JOB_ADDRESS JOB_CITY_ST_ZIP			

A-A (1 : 1)

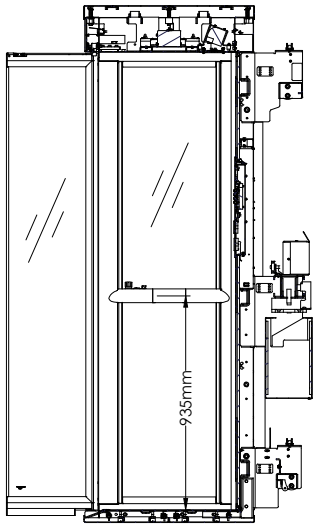

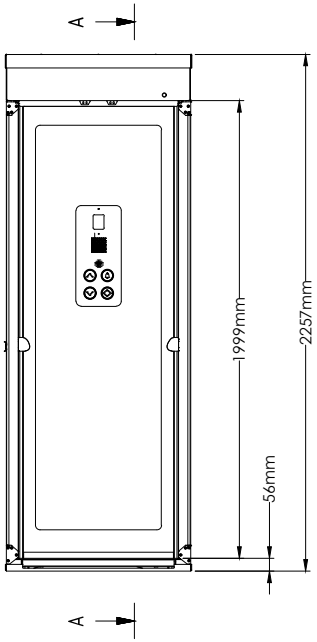

Hatch cover shown

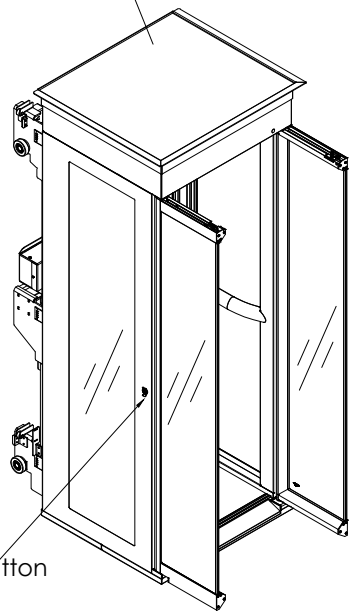

B-B (1 : 1)

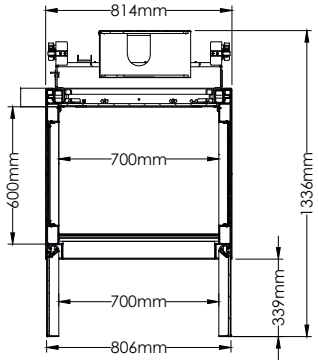

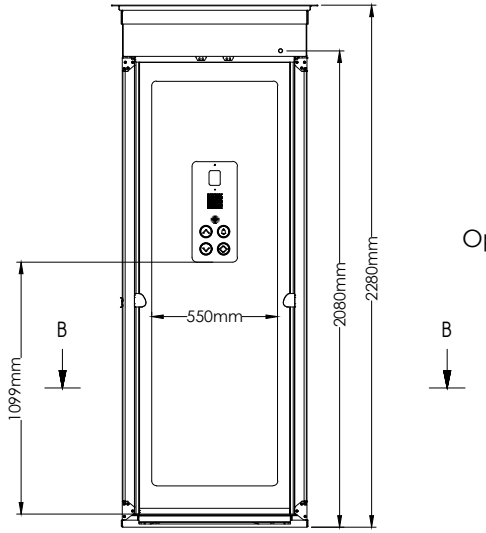

TITLE: ASCENDA TFL-S			SCALE: NONE
DRAWN BY: DRAWN_BY	DATE: DRAWN_DATE	DRAWING NO.: DRAWING_NO	REV: REV_NO
JOB INFORMATION: JOB_REFERENCE JOB_ADDRESS JOB_CITY_ST_ZIP			

OPTIONAL CONTROLLER LOCATIONS

NOTE:
The maximum number bends is two.

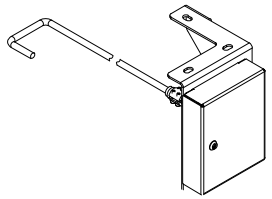

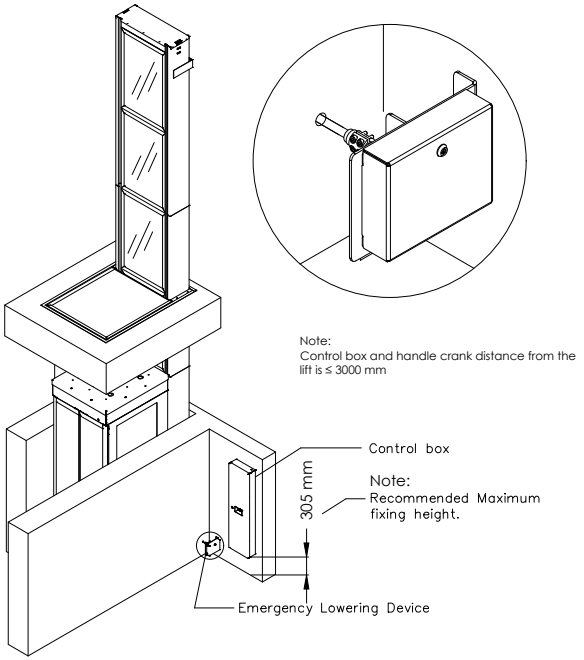

Configuration 1

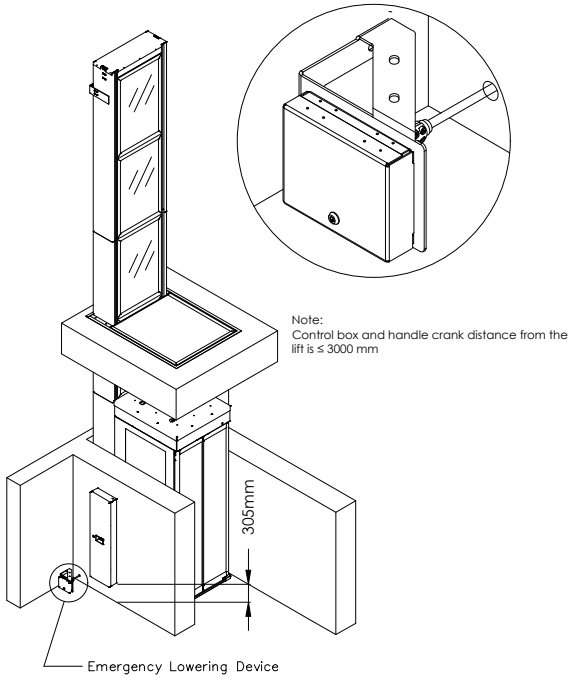

Configuration 2

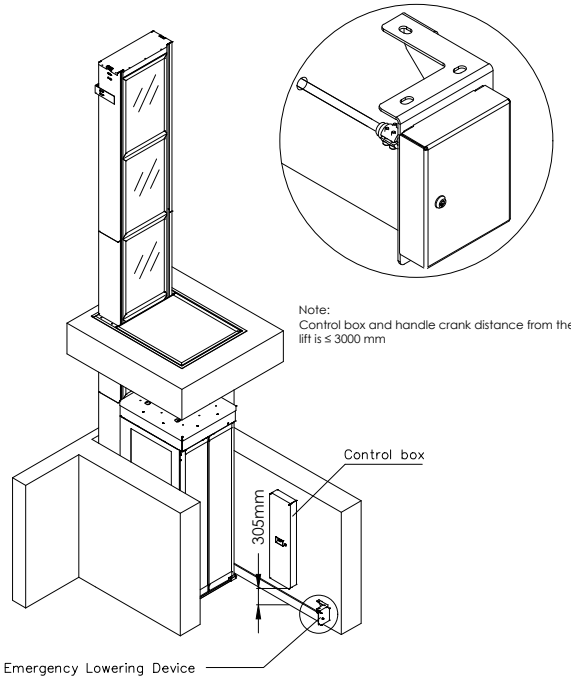

Configuration 3

TITLE: ASCENDA TFL-S			SCALE: NONE
DRAWN BY: DRAWN_BY	DATE: DRAWN_DATE	DRAWING NO.: DRAWING_NO	REV: REV_NO
JOB INFORMATION: JOB_REFERENCE JOB_ADDRESS JOB_CITY_ST_ZIP			

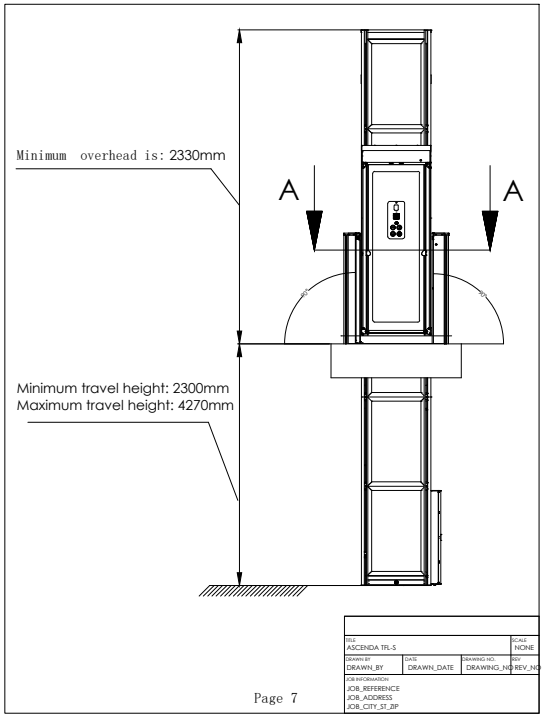

Page 7

OPTIONAL LANDING GATE

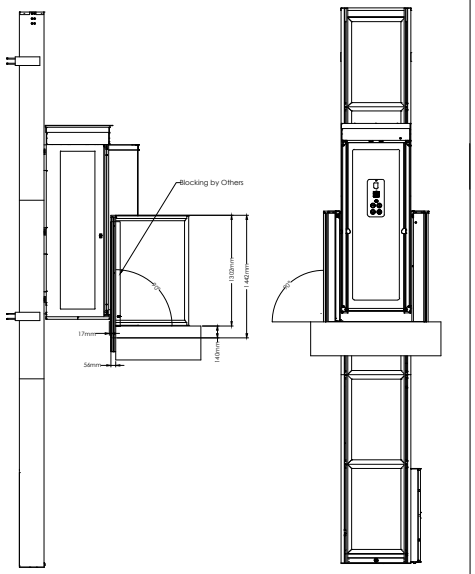

Page 8

OPTIONAL LANDING GATE

CASE 1: A-A (1 : 1)

CASE 2: A-A (1 : 1)

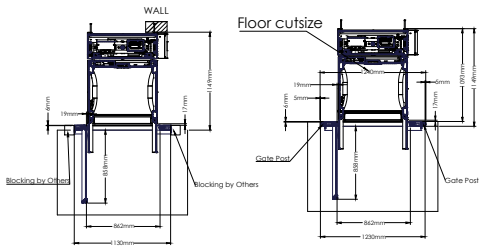

Required cuts by others

Gate support posts are suitable for masonry construction only an should not be used for non-masonry construction.

Page 9

OPTIONAL LANDING GATE

Ascenda size "M" elevator specifications

General:

- Travel: xxx
- Overhead: xxx
- Speed: 0.15 m/s
- Load capacity: 350kg
- Stops: two
- Single opening (B side)

Car features:

- 700mm x 800mm car size
- 1999mm interior car height
- White/black texture powder coated cab with clear laminated safety glass vision panels
- 2 handrails (One with integrated control and one without integrated control)
- Black car accent strip
- Charcoal forgo flooring
- Energy saving recessed led light with silver trim rings
- 1990mm clear laminated safety glass saloon doors
- Flip down seat

Fixtures:

- Black acrylic car operating panel (cop) with with integrated keypad phone and status display, up/down arrow buttons, and alarm button
- Silver aluminum handrail with controls, up/down arrow buttons, door open button, in car emergency stop button and fan knob
- Wireless hall stations with up/down arrow buttons and door open button

Mechanical equipment:

- Modular extruded aluminum rail structure
- Car frame assembly
- 24 mm pitch screw drive system
- Integrated frequency inverter drive synchronous motor

Electrical:

- 1PH, 208V - 240V, 50/60HZ, 32A

Safety devices:

- Safety nut
- Belt monitor
- One upper and one lower final limits
- In-car emergency stop switch and alarm
- Car door locking device for car gate(s)
- Battery back up emergency car light and alarm
- Top car obstruction safety device
- Bottom car obstruction safety device
- Hatch obstruction safety device
- Battery lowering system
- Overload sensor
- Manual lowering device

Controls:

- Hold to run
- Self diagnostic system with diagnostic led

Optional included features:

- Iot module - wi-fi and sim card
- Embedded tower led light strip
- Integrated fan
- Mirror finish ceiling
- Control buttons - dual color
- Accent car panel with recessed light
- Control box location: a side/c side/remote (2 bends maximum)

TITLE: ASCENDA TFL-M			SCALE: NONE
DRAWN BY: DRAWN_BY	DATE: DRAWN_DATE	DRAWING NO.: DRAWING_NO	REV: REV_NO
JOB INFORMATION: JOB_REFERENCE JOB_ADDRESS JOB_CITY_ST_ZIP			

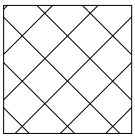

Section force (include rated load):13407 (N)
Section area: 0.24 m²
Force per square meter: 52862.5 (N/m²)

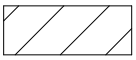

Note:
If a framework contractor is used, the external dimensions will increase by 6mm,
Construction needs to be adjusted according to the actual situation to meet the tolerance of+/-3mm for finished openings, squares, and dimensions

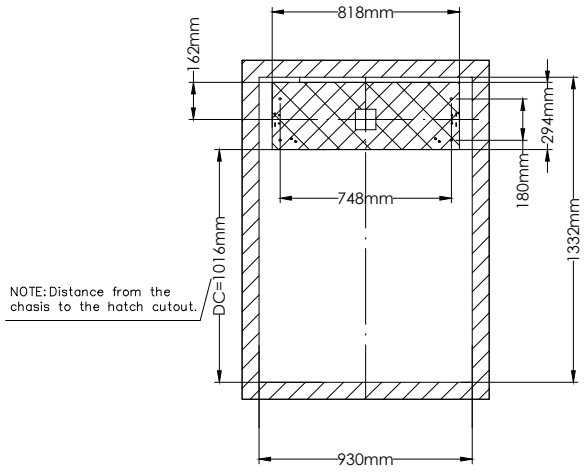

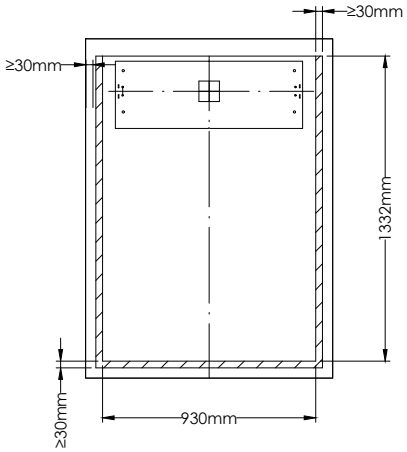

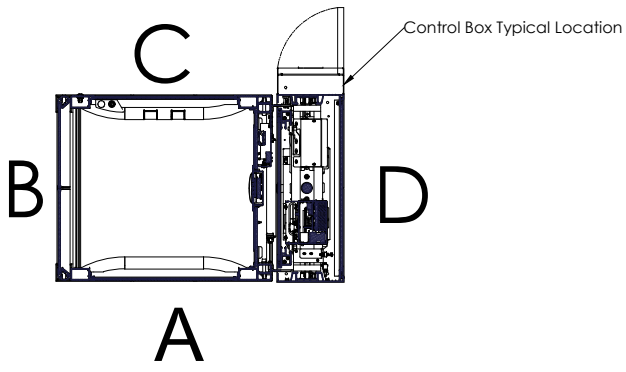

* The hatch flange will rest on the upper landing finished floor.

Crash warning: to ensure unobstructed operation, no items such as floor or ceiling trim, pictures, window sill, etc, should be in the area of the elevator or hatch flange. We recommend at least 1" from any obstruction to the hatch flange.

TITLE: ASCENDA TFL-M			SCALE: NONE
DRAWN BY: DRAWN_BY	DATE: DRAWN_DATE	DRAWING NO.: DRAWING_NO	REV: REV_NO
JOB INFORMATION: JOB_REFERENCE JOB_ADDRESS JOB_CITY_ST_ZIP			

REVISION HISTORY				
ZONE	REV	DESCRIPTION	DATE	APPROVED
1	A	4-M8->2-M8	2025/11/26	Andy

Walls of bricks, terra-cotta, hollow blocks,and similar materials shall not be used for attachment of guide-rail brackets unless ,they are adequately reinforced.pull out force 1300N

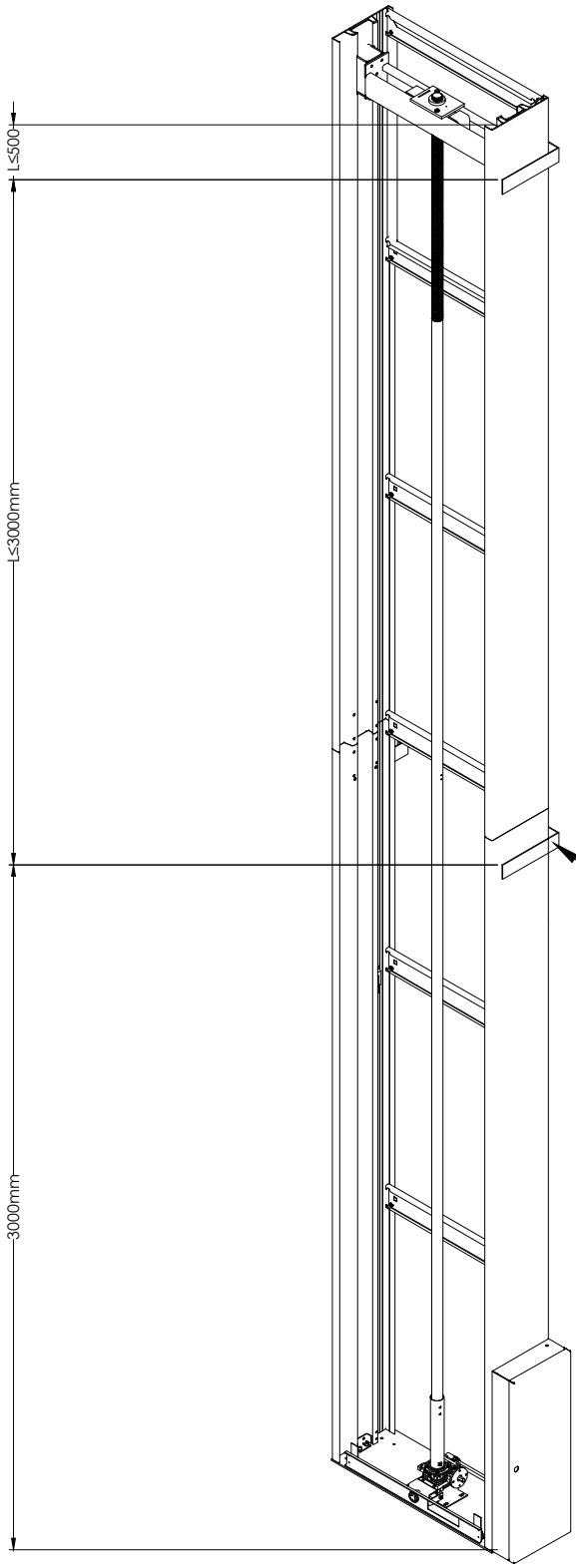

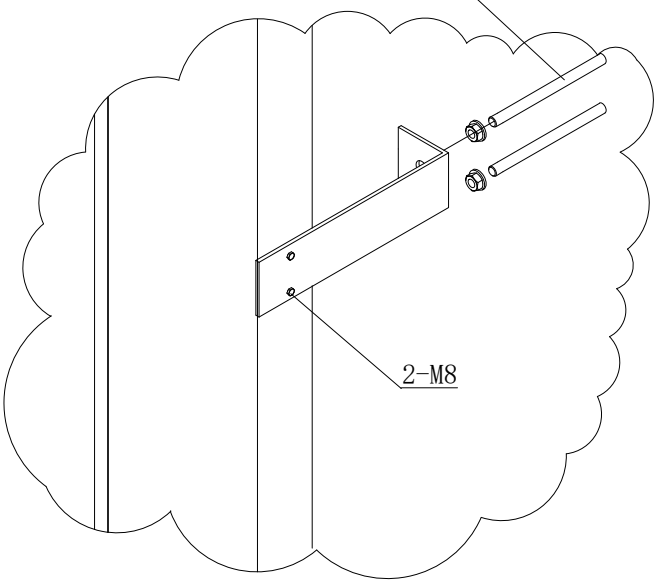

A

1300N in total per side,
2600N per fixing area
See detail A

TITLE ASCENDA TFL-M			SCALE
DRAWN BY	DATE	DRAWING NO.	REV A
JOB INFORMATION			

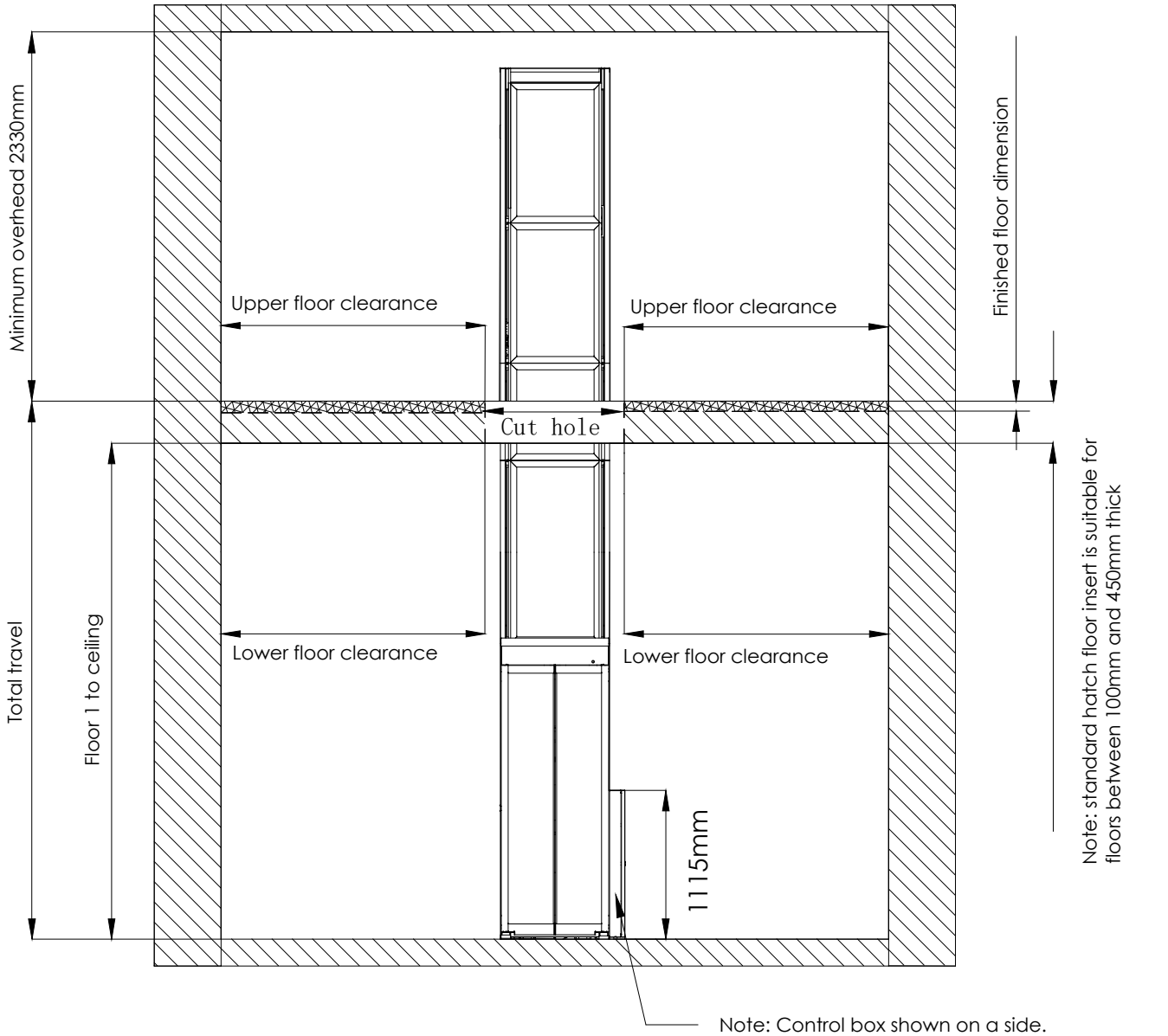

Note: Control box shown on a side.
Standard tower mounted controller requires a minimum lower floor area clearance of 920mm on control box side.

Job specific information:

	OVERHEAD
	TOTAL TRAVEL FLOOR 1 TO 2

Notes:

1) Consult local authority to ensure compliance with state and local codes.
2) Maximum travel is 4270mm
3) Minimum floor 1 to ceiling measurement is 2150mm
4) Upper floor clearance is 40mm - 100 or greater than 300mm
5) Lower floor clearance is 19mm - 100mm or greater than 300mm
6) Overhead notes:
   - Minimum overhead is 2330mm with standard equipment
   - Engineering review is required if overhead exceeds 2550mm

TITLE			SCALE
ASCENDA TFL-M			NONE
DRAWN BY	DATE	DRAWING NO.	REV
DRAWN_BY	DRAWN_DATE	DRAWING_NO	REV_NO
JOB INFORMATION			
JOB_REFERENCE JOB_ADDRESS JOB_CITY_ST_ZIP			

When folded down the seat dimensions are：400mm X 315mm (WXD)
Seat maximum load capacity is 150kg

A-A (1 : 1)

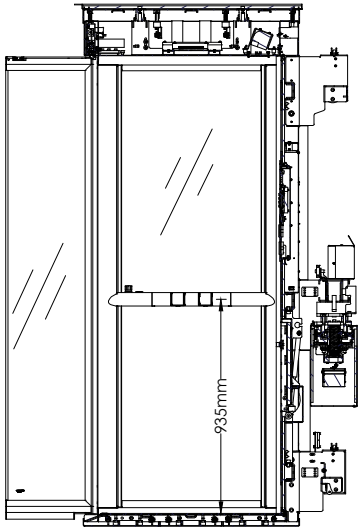

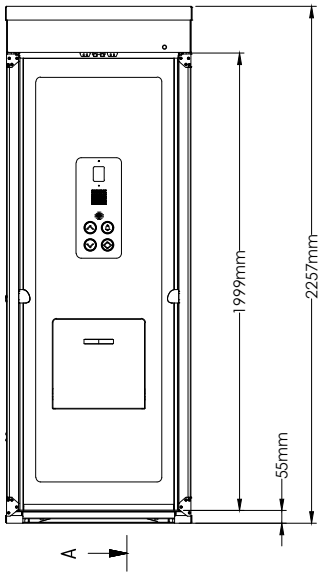

Hatch cover shown

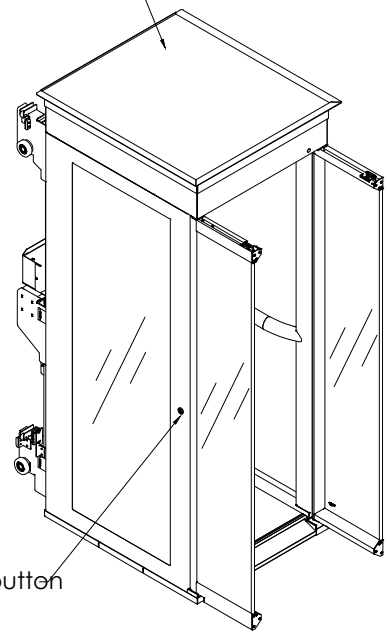

Open door button

B-B (1 : 1)

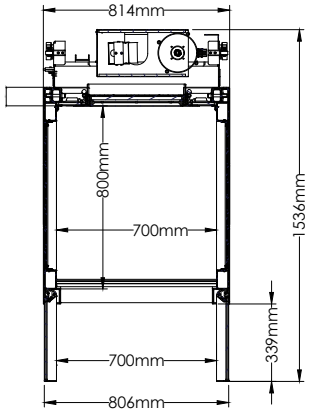

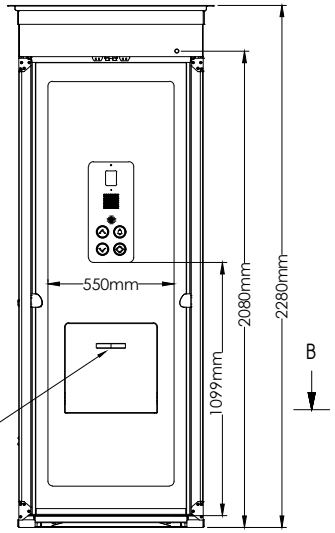

Fold down seat handle

TITLE: ASCENDA TFL-M			SCALE: NONE
DRAWN BY: DRAWN_BY	DATE: DRAWN_DATE	DRAWING NO.: DRAWING_NO	REV: REV_NO
JOB INFORMATION: JOB_REFERENCE JOB_ADDRESS JOB_CITY_ST_ZIP			

OPTIONAL CONTROLLER LOCATIONS

NOTE:
The maximum number bends is two.

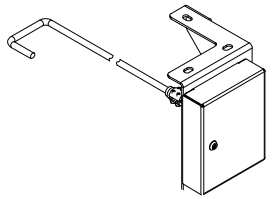

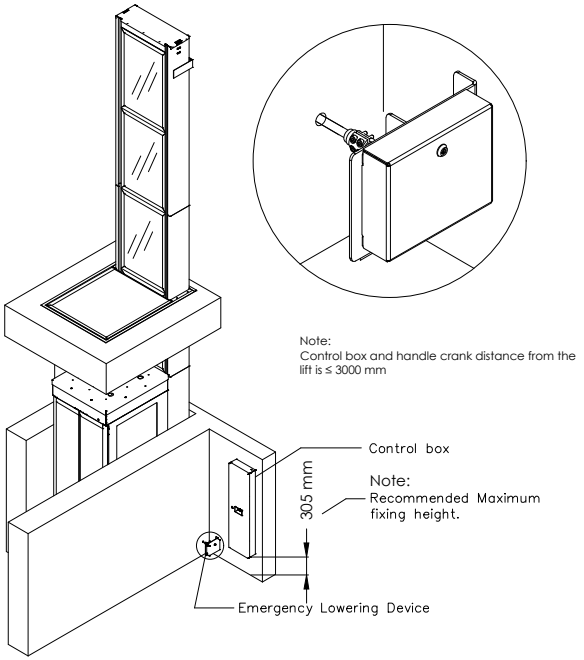

Configuration 1

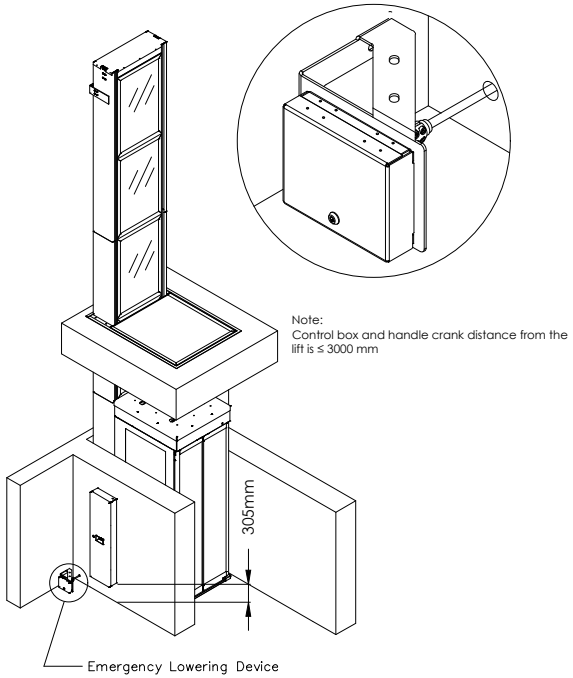

Configuration 2

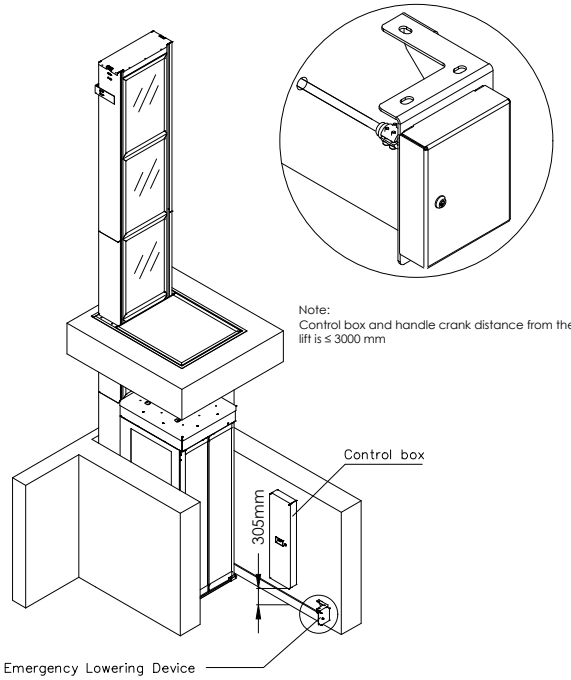

Configuration 3

TITLE: ASCENDA TFL-M			SCALE: NONE
DRAWN BY: DRAWN_BY	DATE: DRAWN_DATE	DRAWING NO.: DRAWING_NO	REV: REV_NO
JOB INFORMATION: JOB_REFERENCE JOB_ADDRESS JOB_CITY_ST_ZIP			

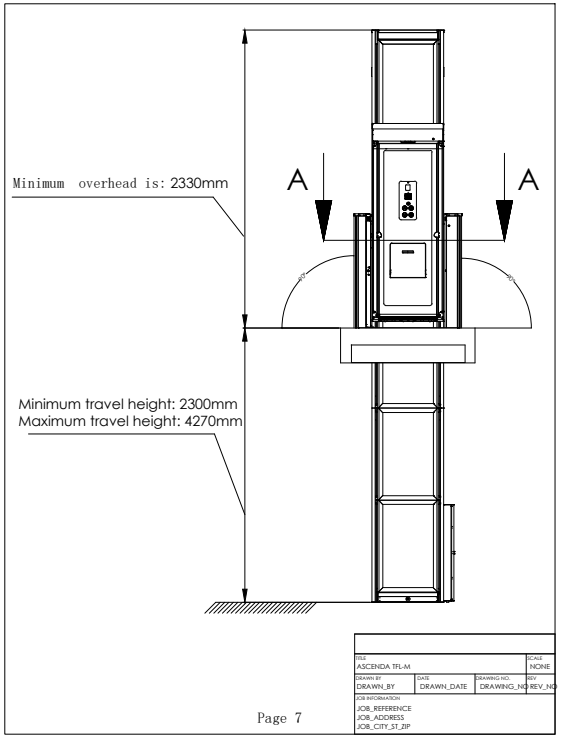

Page 7

OPTIONAL LANDING GATE

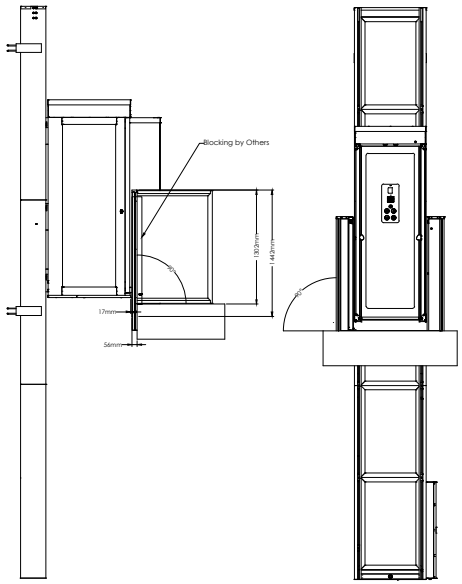

Page 8

OPTIONAL LANDING GATE

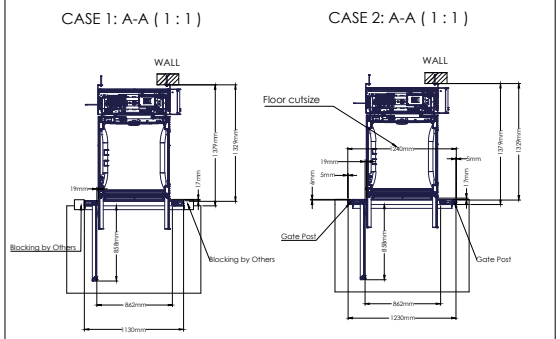

Required cuts by others

Gate support posts are suitable for masonry construction only an should not be used for non-masonry construction.

Page 9

OPTIONAL LANDING GATE

Ascenda size "L" elevator specifications

General:

- Travel: xxx
- Overhead: xxx
- Speed: 0.15m/s
- Load capacity: 350kg
- Stops: two
- Single opening (B side)

Car features:

- 700mm x 1000mm car size
- 1999mm interior car height
- White/black texture powder coated cab with clear laminated safety glass vision panels
- 2 handrails (one with integrated control and one without integrated control)
- Black car accent strip
- Charcoal forgo Flooring
- Energy saving recessed led light with silver trim rings
- 1990mm clear laminated safety glass saloon doors
- Flip down seat

Fixtures:

- Black acrylic car operating panel (cop) with with integrated keypad phone and status display, up/down arrow buttons, and alarm button
- Silver aluminum handrail with controls, up/down arrow buttons, door open button, in car emergency stop button and fan knob
- Wireless hall stations with up/down arrow buttons and door open button

Mechanical equipment:

- Modular extruded aluminum rail Structure
- Car frame assembly
- 24 mm pitch screw drive system
- Integrated frequency inverter drive synchronous motor

Electrical:

- 1PH, 208V -240V, 50/60HZ, 32A

Safety devices:

- Safety nut
- Belt monitor
- One upper and one lower final limits
- In-car emergency stop switch and alarm
- Car door locking device for car gate(s)
- Battery back up emergency car light and alarm
- Top car obstruction safety device
- Bottom car obstruction safety device
- Hatch obstruction safety device
- Battery lowering system
- Overload sensor
- Manual lowering device

Controls:

- Hold to run
- Self diagnostic system with diagnostic led

Optional included features:

- Iot module - wi-fi and sim card
- Embedded tower led light strip
- Integrated fan
- Mirror finish ceiling
- Control buttons - dual color
- Accent car panel with recessed light
- Control box location: a side/c side/remote (2 bends maximum)

TITLE: ASCENDA TFL-L			SCALE: NONE
DRAWN BY: DRAWN_BY	DATE: DRAWN_DATE	DRAWING NO.: DRAWING_NO	REV: REV_NO
JOB INFORMATION: JOB_REFERENCE JOB_ADDRESS JOB_CITY_ST_ZIP			

Section force (include rated load): 13750 (N)
Section area: 0.24 m²
Force per square meter: 57292 (N/m²)

Note:
If a framework contractor is used, the external dimensions will increase by 6mm,
Construction needs to be adjusted according to the actual situation to meet the tolerance of+/-3mm for finished openings, squares, and dimensions

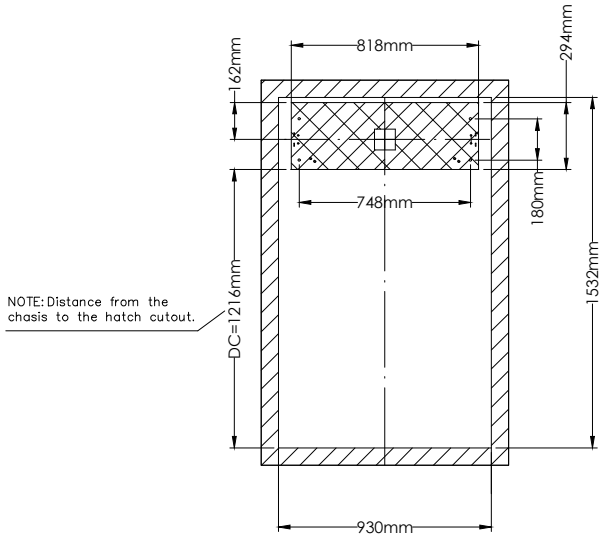

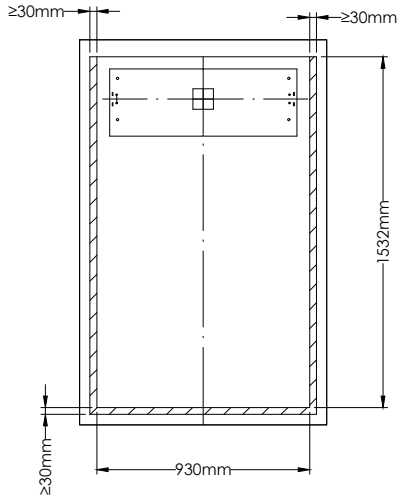

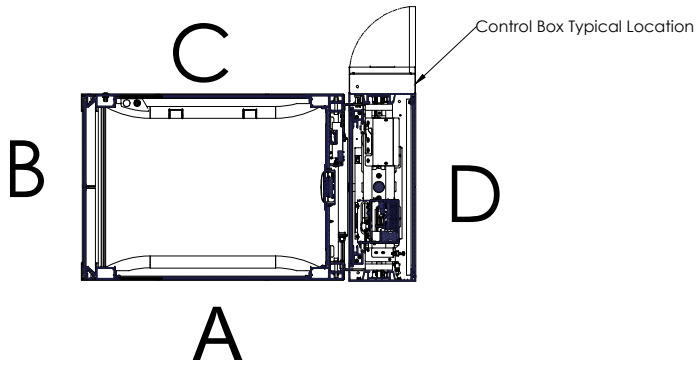

* The hatch flange will rest on the upper landing finished floor.

Crash warning: to ensure unobstructed operation, no items such as floor or ceiling trim, pictures, window sill, etc, should be in the area of the elevator or hatch flange. We recommend at least 1" from any obstruction to the hatch flange.

TITLE: ASCENDA TFL-L			SCALE: NONE
DRAWN BY: DRAWN_BY	DATE: DRAWN_DATE	DRAWING NO.: DRAWING_NO	REV: REV_NO
JOB INFORMATION: JOB_REFERENCE JOB_ADDRESS JOB_CITY_ST_ZIP			

REVISION HISTORY				
ZONE	REV	DESCRIPTION	DATE	APPROVED
1	A	4-M8->2-M8	2025/11/26	Andy

Walls of bricks, terra-cotta, hollow blocks,and similar materials shall not be used for attachment of guide-rail brackets unless ,they are adequately reinforced.pull out force 1300N

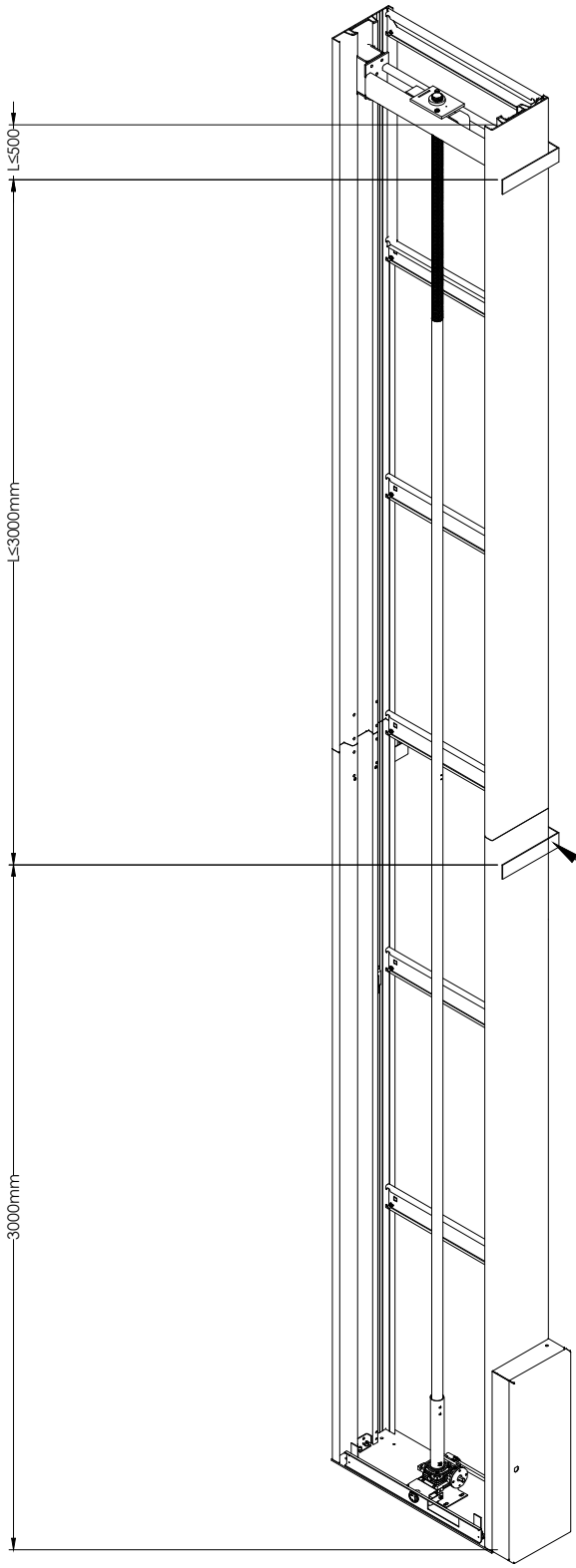

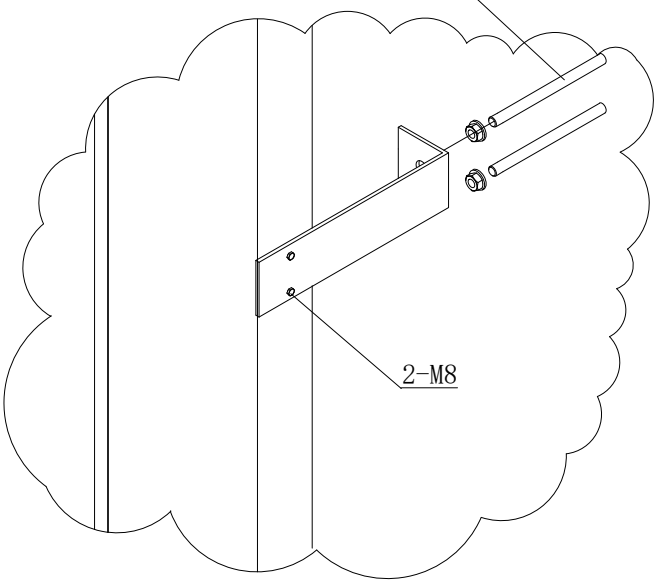

A

1300N in total per side,
2600N per fixing area
See detail A

TITLE ASCENDA TFL-L			SCALE
DRAWN BY	DATE	DRAWING NO.	REV A
JOB INFORMATION			

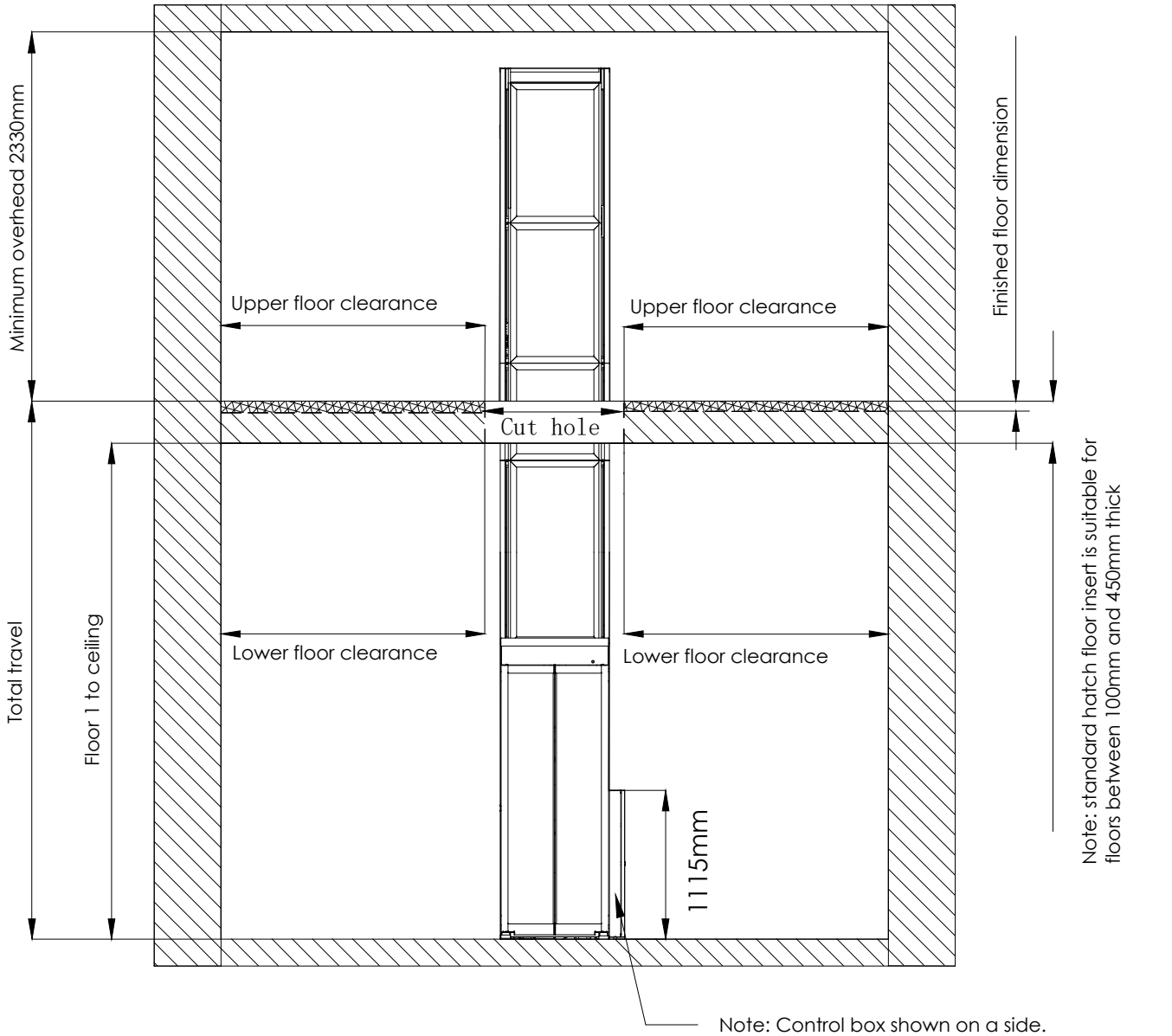

Note: Control box shown on a side.
Standard tower mounted controller requires a minimum lower floor area clearance of 920mm on control box side.

Notes:

1) Consult local authority to ensure compliance with state and local codes.

2) Maximum travel is 4270mm

3) Minimum floor 1 to ceiling measurement is 2150mm

4) Upper floor clearance is 40mm - 100 or greater than 300mm

5) Lower floor clearance is 19mm - 100mm or greater than 300mm

6) Overhead notes:
- Minimum overhead is 2330mm with standard equipment
- Engineering review is required if overhead exceeds 2550mm

Job specific information:

	OVERHEAD
	TOTAL TRAVEL FLOOR 1 TO 2

TITLE: ASCENDA TFL-L			SCALE: NONE
DRAWN BY: DRAWN_BY	DATE: DRAWN_DATE	DRAWING NO.: DRAWING_NO	REV: REV_NO
JOB INFORMATION: JOB_REFERENCE JOB_ADDRESS JOB_CITY_ST_ZIP			

When folded down the seat dimensions are：400mm X 315mm (WXD)
Seat maximum load capacity is 150kg

A-A (1 : 1)

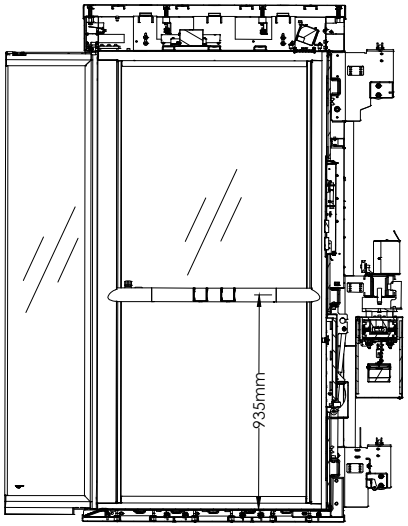

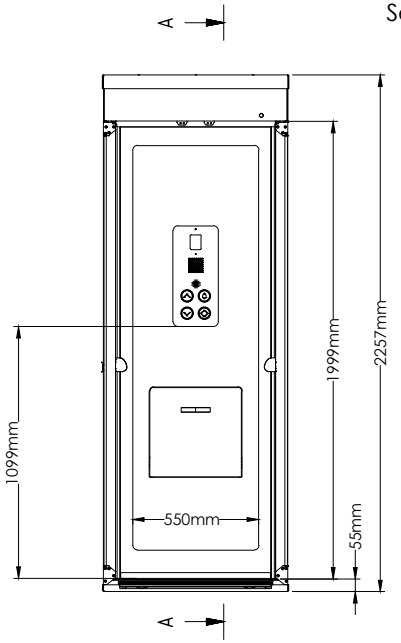

Hatch cover shown

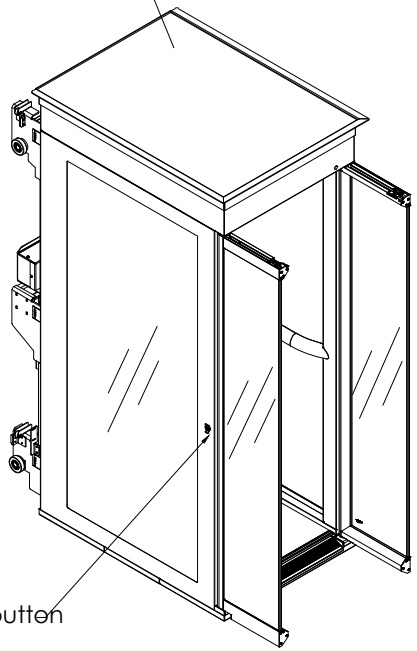

Open door button

B-B (1 : 1)

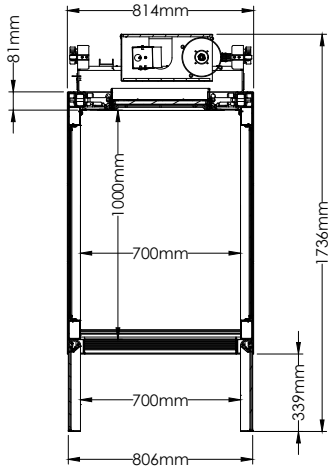

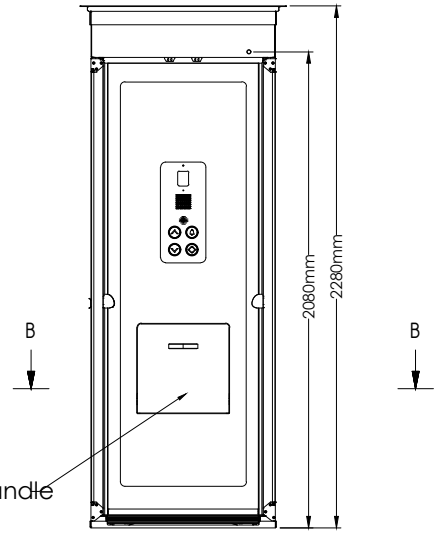

Fold down seat handle

TITLE: ASCENDA TFL-L			SCALE: NONE
DRAWN BY: DRAWN_BY	DATE: DRAWN_DATE	DRAWING NO.: DRAWING_NO	REV: REV_NO
JOB INFORMATION: JOB_REFERENCE JOB_ADDRESS JOB_CITY_ST_ZIP			

OPTIONAL CONTROLLER LOCATIONS

NOTE:
The maximum number bends is two.

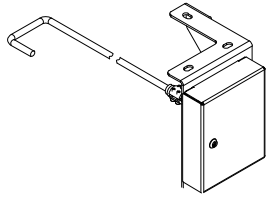

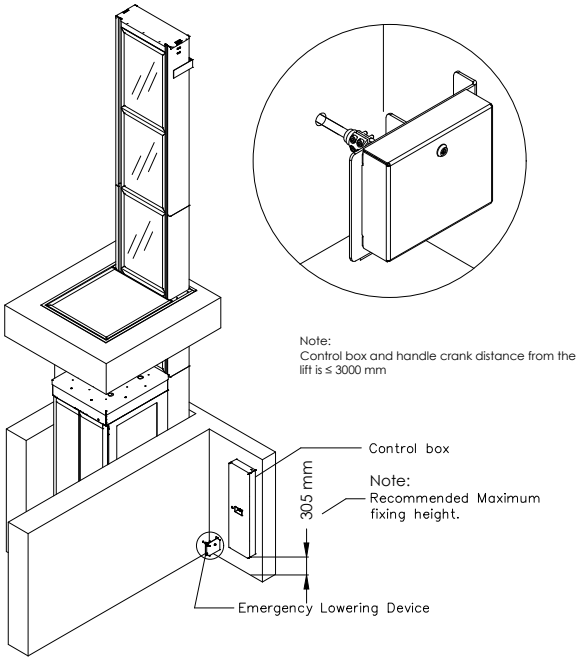

Configuration 1

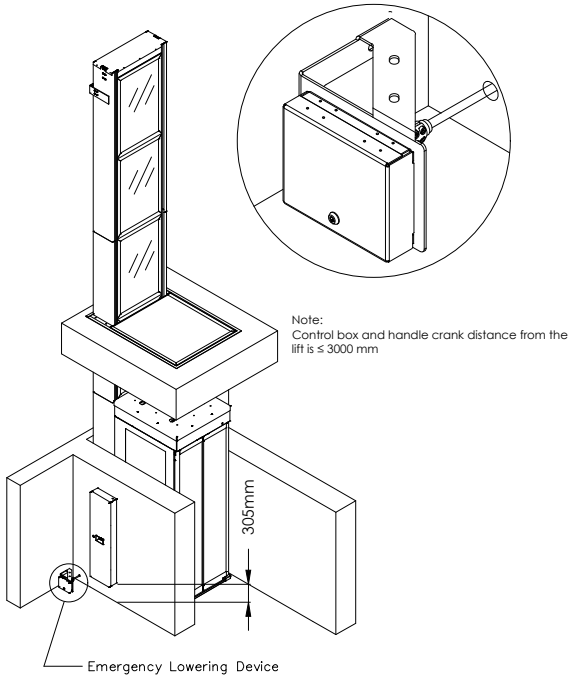

Configuration 2

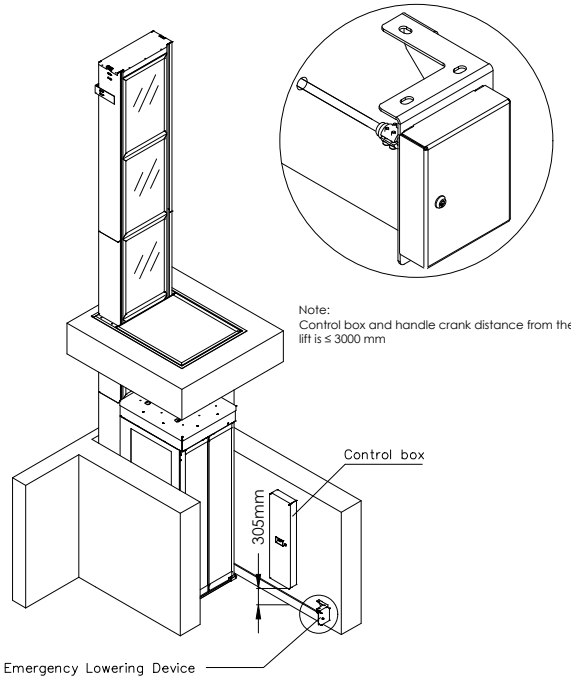

Configuration 3

TITLE: ASCENDA TFL-L			SCALE: NONE
DRAWN BY: DRAWN_BY	DATE: DRAWN_DATE	DRAWING NO.: DRAWING_NO	REV: REV_NO
JOB INFORMATION: JOB_REFERENCE JOB_ADDRESS JOB_CITY_ST_ZIP			

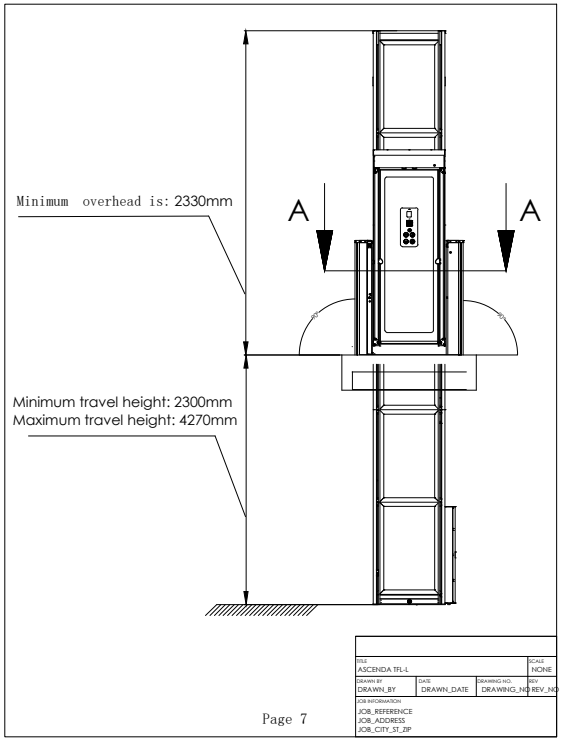

Page 7

OPTIONAL LANDING GATE

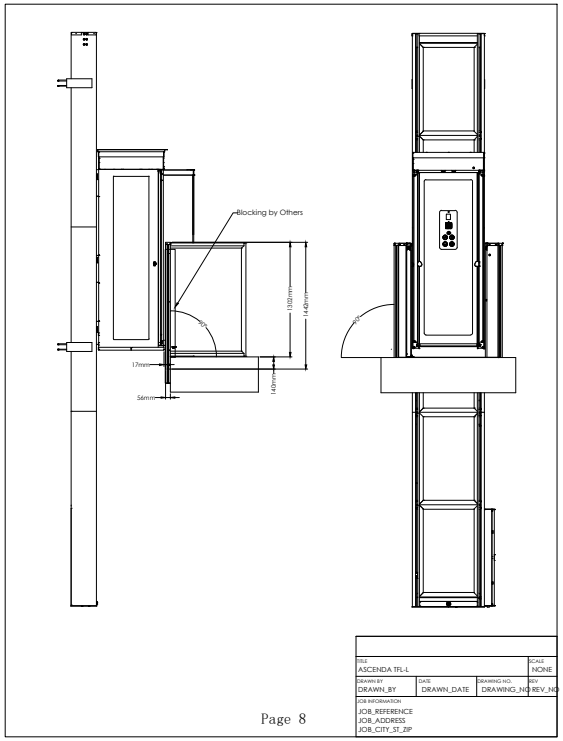

Page 8

OPTIONAL LANDING GATE

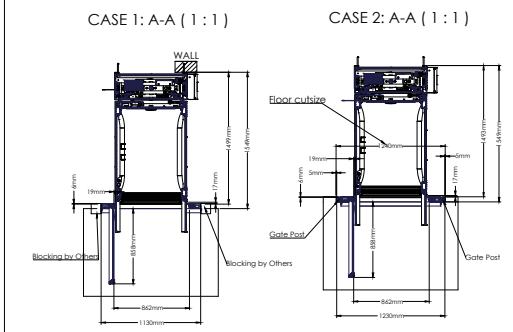

Required cuts by others

Gate support posts are suitable for masonry construction only an should not be used for non-masonry construction.

Page 9

OPTIONAL LANDING GATE

Ascenda size "XL-C" elevator specifications

General:

- Travel: xxx
- Overhead: xxx
- Speed: 0.15m/s
- Load capacity: 350kg
- Stops: two
- Single opening (C side)

Car features:

- 1250mm x 850mm car size
- 1999mm interior car height
- White/black texture powder coated cab with clear laminated safety glass vision panels
- 2 handrails (One with integrated control and one without integrated control)
- Black car accent strip
- Charcoal forgo flooring
- Energy saving recessed led light with silver trim rings
- 1990mm clear laminated safety glass saloon doors
- Flip down seat

Fixtures:

- Black acrylic car operating panel (cop) with with integrated keypad phone and status display, up/down arrow buttons, and alarm button
- Silver aluminum handrail with controls, up/down arrow buttons, door open button, in car emergency stop button and fan knob
- Wireless hall stations with up/down arrow buttons and door open button

Mechanical equipment:

- Modular extruded aluminum rail Structure
- Car frame assembly
- 24 mm pitch screw drive system
- Integrated frequency inverter drive synchronous motor

Electrical:

- 1PH, 208V - 240V, 50/60HZ, 32A

Safety devices:

- Safety nut
- Belt monitor
- One upper and one lower final limits
- In-car emergency stop switch and alarm
- Car door locking device for car gate(s)
- Battery back up emergency car light and alarm
- Top car obstruction safety device
- Bottom car obstruction safety device
- Hatch obstruction safety device
- Battery lowering system
- Overload sensor
- Manual lowering device

Controls:

- Hold to run
- Self diagnostic system with diagnostic led

Optional included features:

- Iot module - wi-fi and sim card
- Embedded tower led light strip
- Integrated fan
- Mirror finish ceiling
- Control buttons - dual color
- Accent car panel with recessed light
- Control box location: a side/c side/remote (2 bends maximum)

TITLE			SCALE
ASCENDA TFL-XL C			NONE
DRAWN BY	DATE	DRAWING NO.	REV
DRAWN_BY	DRAWN_DATE	DRAWING_NO	REV_NO
JOB INFORMATION			
JOB_REFERENCE JOB_ADDRESS JOB_CITY_ST_ZIP			

Section force (include rated load): 14385.5 (N)
Section area: 0.4 m²
Force per square meter: 35964 (N/m²)

Note:
If a framework contractor is used, the external dimensions will increase by 6mm,
Construction needs to be adjusted according to the actual situation to meet the tolerance of+/-3mm for finished openings, squares, and dimensions

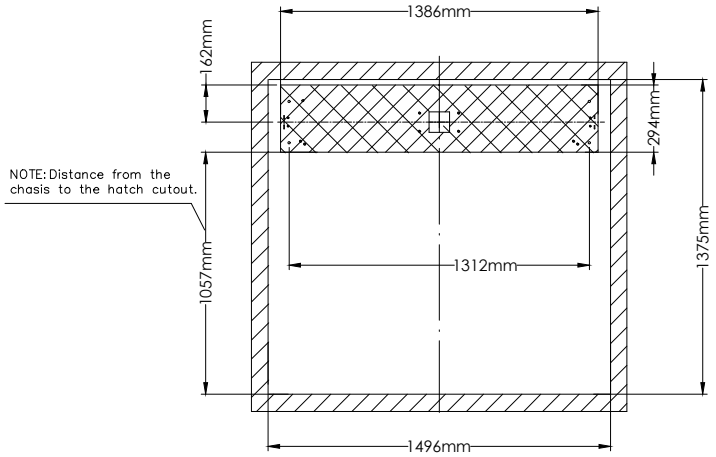

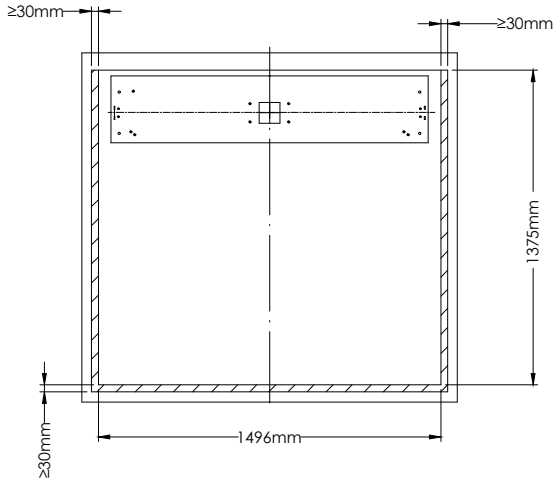

B

C

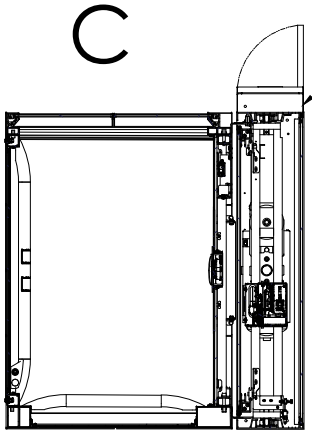

D

A

* The hatch flange will rest on the upper landing finished floor.

Crash warning: to ensure unobstructed operation, no items such as floor or ceiling trim, pictures, window sill, etc, should be in the area of the elevator or hatch flange. We recommend at least 1" from any obstruction to the hatch flange.

TITLE: ASCENDA TFL-XL C			SCALE: NONE
DRAWN BY: DRAWN_BY	DATE: DRAWN_DATE	DRAWING NO.: DRAWING_NO	REV: REV_NO
JOB INFORMATION: JOB_REFERENCE JOB_ADDRESS JOB_CITY_ST_ZIP			

REVISION HISTORY				
ZONE	REV	DESCRIPTION	DATE	APPROVED
1	A	4-M8->2-M8	2025/11/26	Andy

Walls of bricks, terra-cotta, hollow blocks,and similar materials shall not be used for attachment of guide-rail brackets unless ,they are adequately reinforced.pull out force 1300N

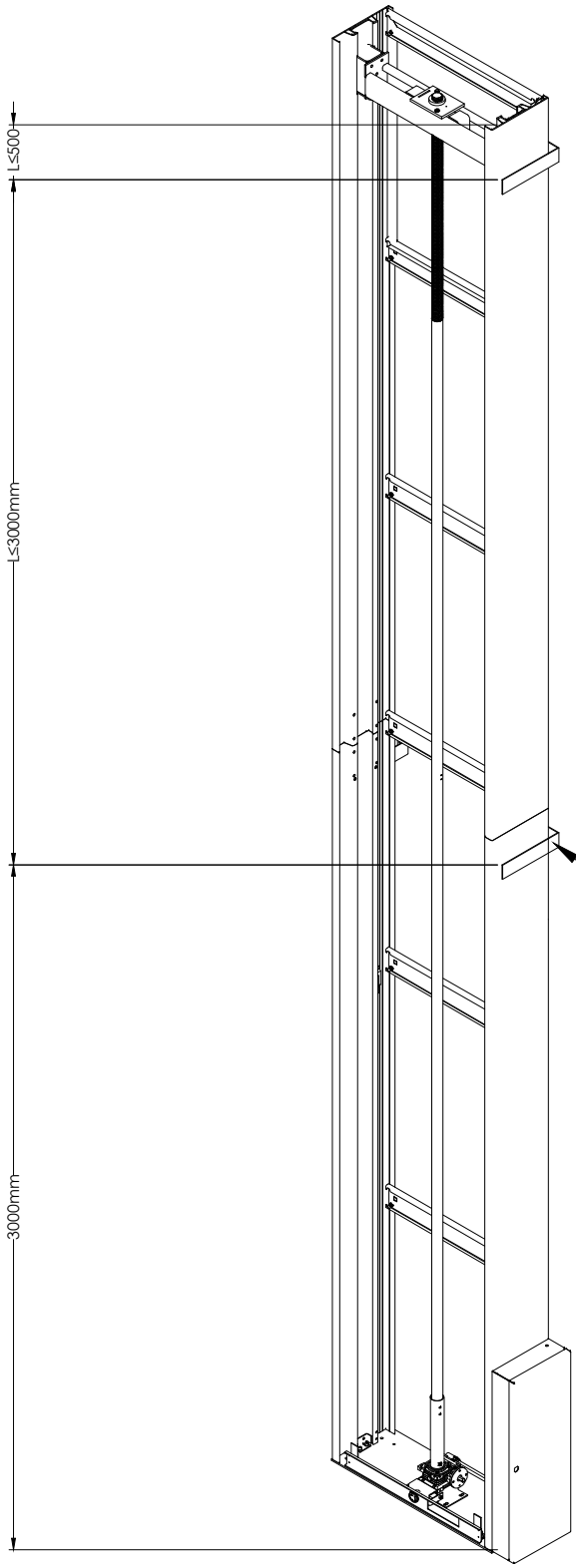

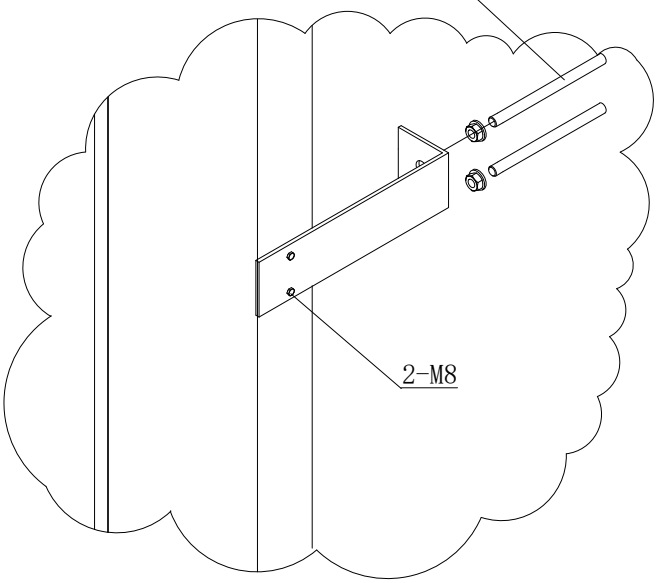

A

1300N in total per side,
2600N per fixing area
See detail A

TITLE: ASCENDA TFL-XL C			SCALE
DRAWN BY	DATE	DRAWING NO.	REV: A
JOB INFORMATION			

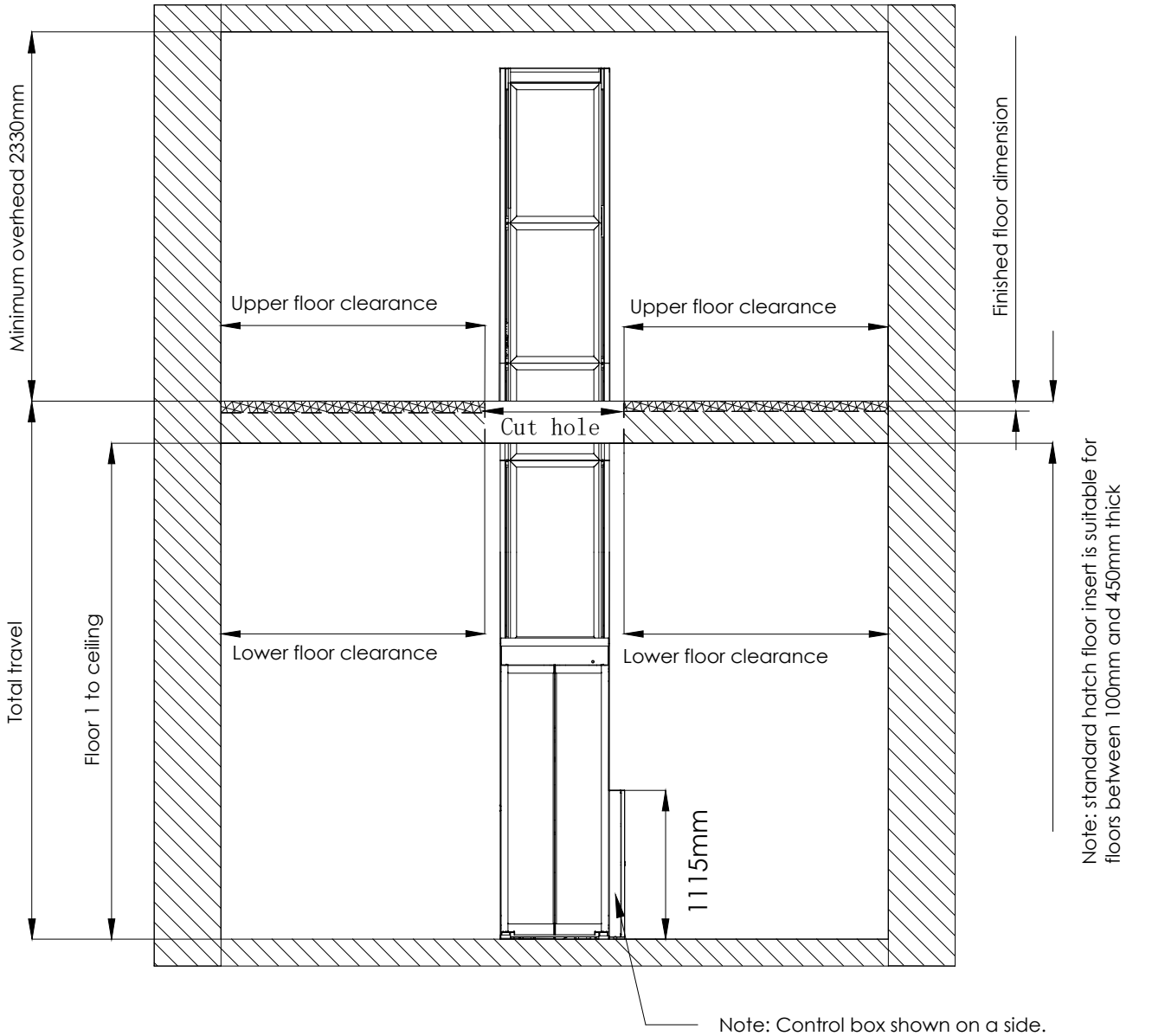

Note: Control box shown on a side.
Standard tower mounted controller requires a minimum lower floor area clearance of 920mm on control box side.

Notes:

1) Consult local authority to ensure compliance with state and local codes.
2) Maximum travel is 4270mm
3) Minimum floor 1 to ceiling measurement is 2150mm
4) Upper floor clearance is 40mm - 100 or greater than 300mm
5) Lower floor clearance is 19mm - 100mm or greater than 300mm
6) Overhead notes:
   - Minimum overhead is 2330mm with standard equipment
   - Engineering review is required if overhead exceeds 2550mm

Job specific information:

	OVERHEAD
	TOTAL TRAVEL FLOOR 1 TO 2

TITLE: ASCENDA TFL-XL C			SCALE: NONE
DRAWN BY: DRAWN_BY	DATE: DRAWN_DATE	DRAWING NO.: DRAWING_NO	REV: REV_NO
JOB INFORMATION: JOB_REFERENCE JOB_ADDRESS JOB_CITY_ST_ZIP			

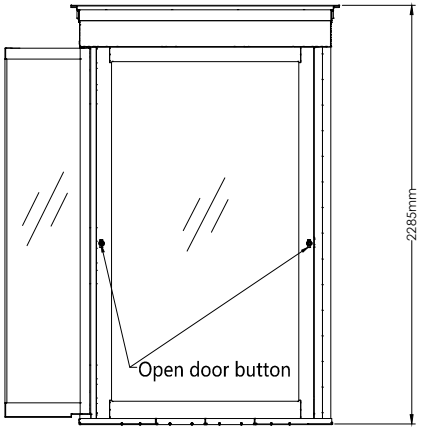

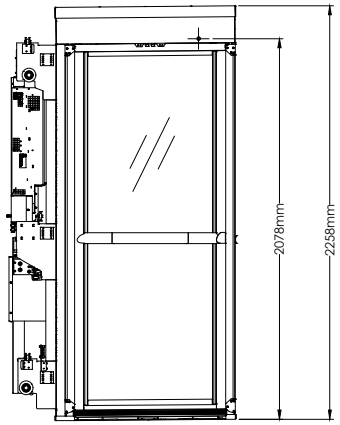

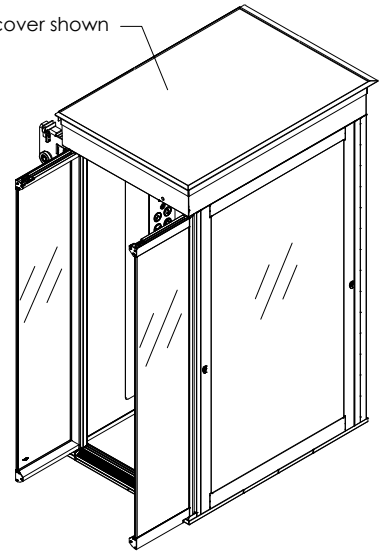

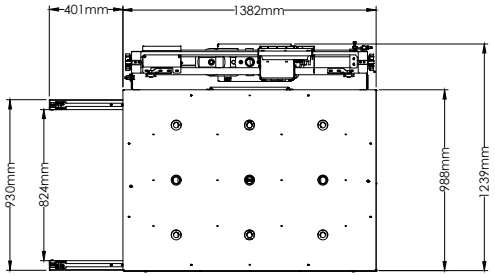

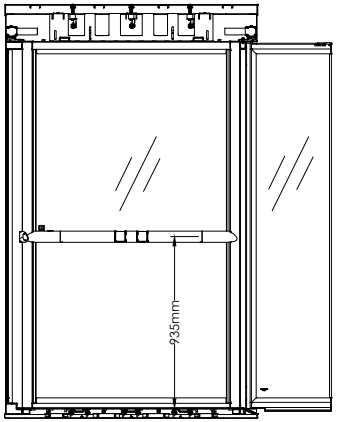

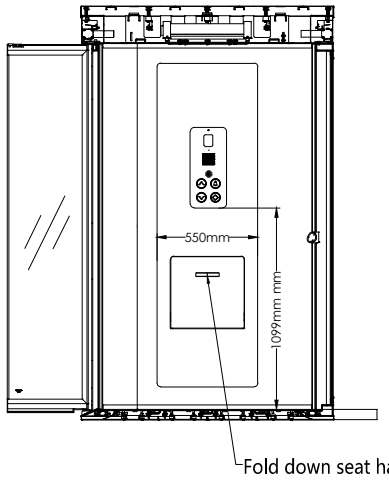

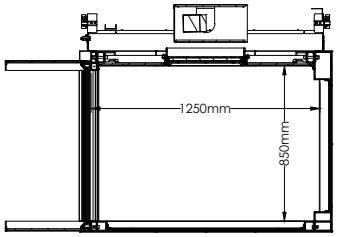

When folded down the seat dimensions are：400mm X 315mm (WXD)
Seat maximum load capacity is 150kg

TITLE: ASCENDA TFL-XL C			SCALE: NONE
DRAWN BY: DRAWN_BY	DATE: DRAWN_DATE	DRAWING NO.: DRAWING_NO	REV: REV_NO

JOB INFORMATION
JOB_REFERENCE
JOB_ADDRESS
JOB_CITY_ST_ZIP

OPTIONAL CONTROLLER LOCATIONS

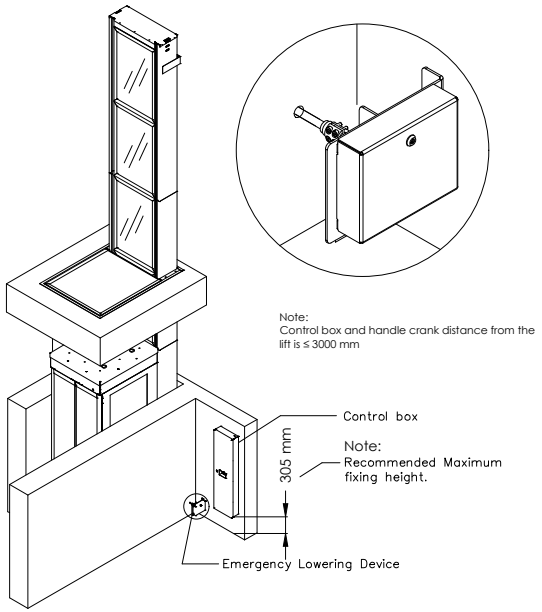

Configuration 1

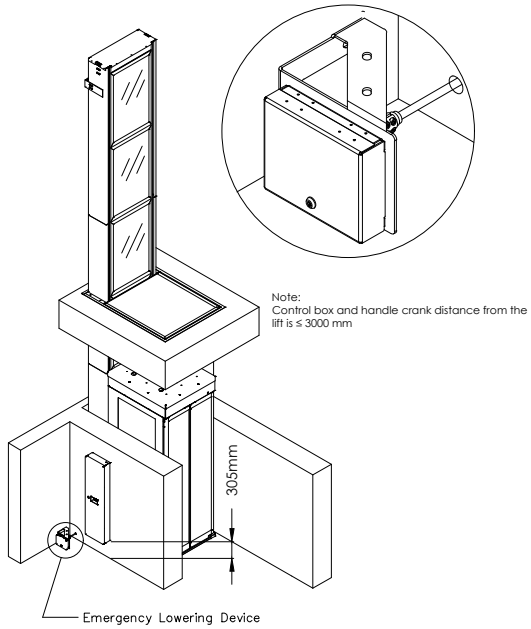

Configuration 2

NOTE:
The maximum number bends is two.

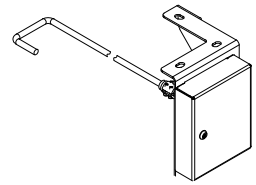

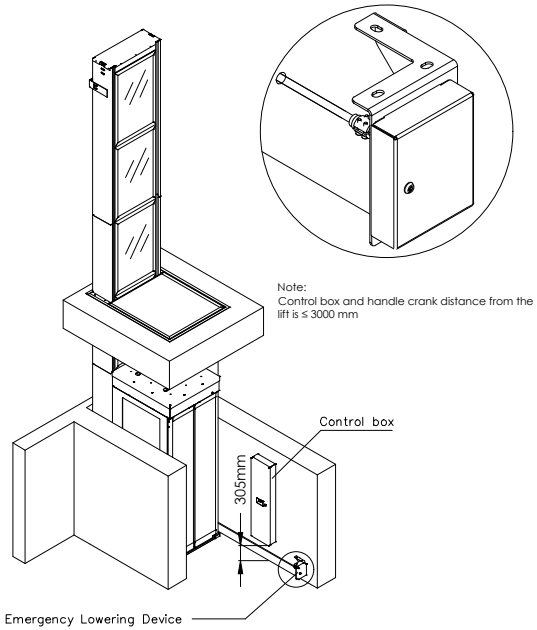

Configuration 3

TITLE: ASCENDA TFL-XL C			SCALE: NONE
DRAWN BY: DRAWN_BY	DATE: DRAWN_DATE	DRAWING NO.: DRAWING_NO	REV: REV_NO
JOB INFORMATION: JOB_REFERENCE JOB_ADDRESS JOB_CITY_ST_ZIP			

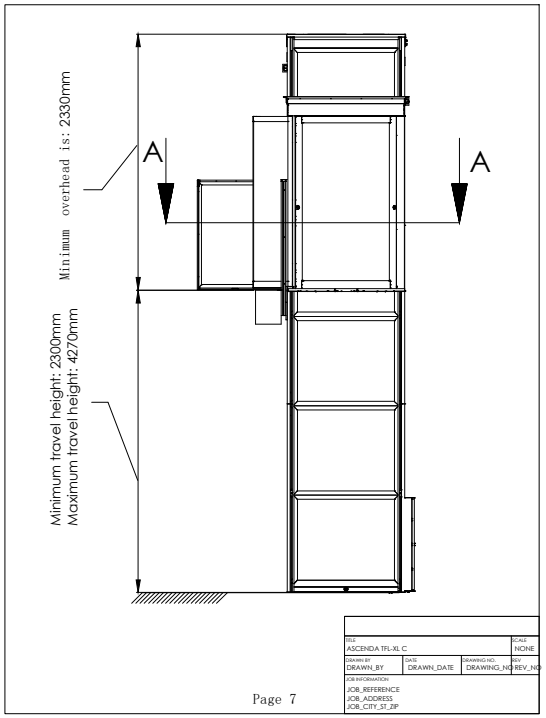

TITLE: ASCENDA TFL-XL C			SCALE: NONE
DRAWN BY: DRAWN_BY	DATE: DRAWN_DATE	DRAWING NO.: DRAWING_NO	REV: REV_NO
JOB INFORMATION: JOB_REFERENCE JOB_ADDRESS JOB_CITY_ST_ZIP			

OPTIONAL LANDING GATE

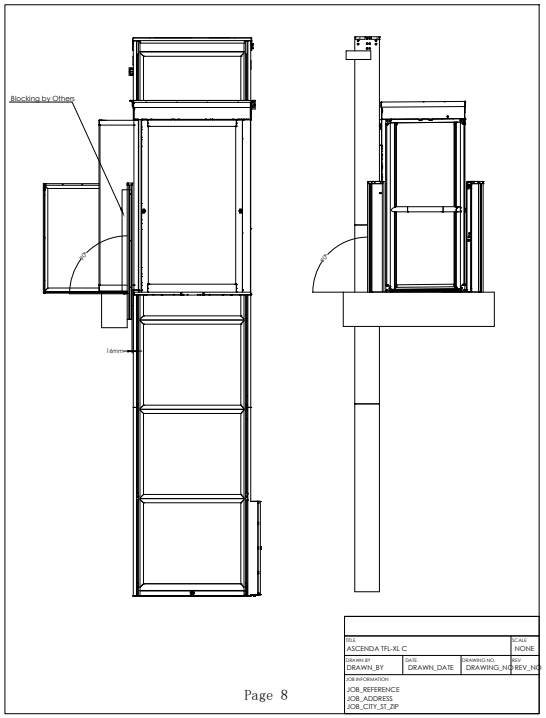

TITLE: ASCENDA TFL-XL C			SCALE: NONE
DRAWN BY: DRAWN_BY	DATE: DRAWN_DATE	DRAWING NO.: DRAWING_NO	REV: REV_NO
JOB INFORMATION: JOB_REFERENCE JOB_ADDRESS JOB_CITY_ST_ZIP			

OPTIONAL LANDING GATE

CASE 1: A-A (1 : 1)

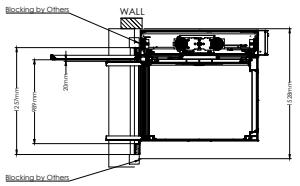

CASE 2:A-A (1 : 1)

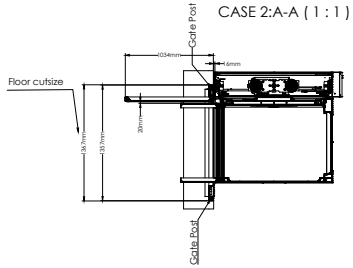

Required cuts by others

Gate support posts are suitable for masonry construction only an should not be used for non-masonry construction.

TITLE: ASCENDA TFL-XL C			SCALE: NONE
DRAWN BY: DRAWN_BY	DATE: DRAWN_DATE	DRAWING NO.: DRAWING_NO	REV: REV_NO
JOB INFORMATION: JOB_REFERENCE JOB_ADDRESS JOB_CITY_ST_ZIP			

OPTIONAL LANDING GATE

Ascenda size "XL A" elevator specifications

General:

- Travel: xxx
- Overhead:xxx
- Speed: 0.15m/s
- Load capacity: 350kg
- Stops: two
- Single opening (A side)

Car features:

- 1250mm x 850mm car size
- 1999mm interior car height
- White/black texture powder coated cab with clear laminated safety glass vision panels
- 2 handrails (One with integrated control and one without integrated control)
- Black car accent strip
- Charcoal forgo flooring
- Energy saving recessed led light with silver trim rings
- 1990mm clear laminated safety glass saloon doors
- Flip down seat

Fixtures:

- Black acrylic car operating panel (cop) with with integrated keypad phone and status display, up/down arrow buttons, and alarm button
- Silver aluminum handrail with controls, up/down arrow buttons, door open button, in car emergency stop button and fan knob
- Wireless hall stations with up/down arrow buttons and door open button

Mechanical equipment:

- Modular extruded aluminum rail Structure
- Car frame assembly
- 24 mm pitch screw drive system
- Integrated frequency inverter drive synchronous motor

Electrical:

- 1PH, 208V -240V, 50/60HZ, 32A

Safety devices:

- Safety nut
- Belt monitor
- One upper and one lower final limits
- In-car emergency stop switch and alarm
- Car door locking device for car gate(s)
- Battery back up emergency car light and alarm
- Top car obstruction safety device
- Bottom car obstruction safety device
- Hatch obstruction safety device
- Battery lowering system
- Overload sensor
- Manual lowering device

Controls:

- Hold to run
- Self diagnostic system with diagnostic led

Optional included features:

- Iot module - wi-fi and sim card
- Embedded tower led light strip
- Integrated fan
- Mirror finish ceiling
- Control buttons - dual color
- Accent car panel with recessed light
- Control box location: a side/c side/remote (2 bends maximum)

TITLE: ASCENDA TFL-XL A			SCALE: NONE
DRAWN BY: DRAWN_BY	DATE: DRAWN_DATE	DRAWING NO.: DRAWING_NO	REV: REV_NO
JOB INFORMATION: JOB_REFERENCE JOB_ADDRESS JOB_CITY_ST_ZIP			

Section force (include rated load): 14385.5 (N)
Section area: 0.4 m²
Force per square meter: 35964 (N/m²)

Note:
If a framework contractor is used, the external dimensions will increase by 6mm,
Construction needs to be adjusted according to the actual situation to meet the tolerance of+/-3mm for finished openings, squares, and dimensions

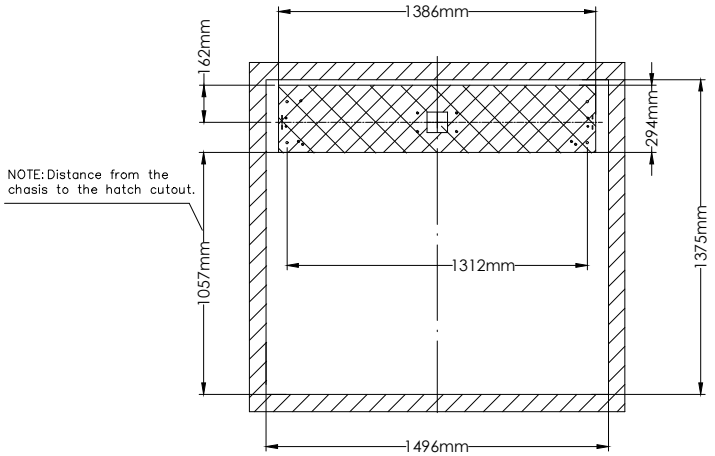

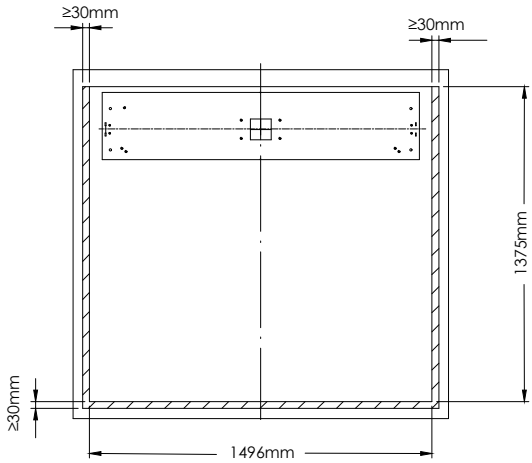

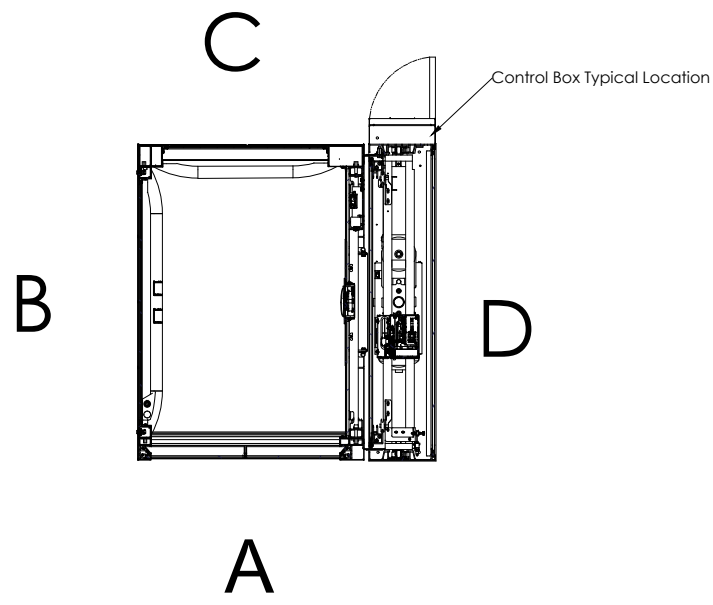

* The hatch flange will rest on the upper landing finished floor.

Crash warning: to ensure unobstructed operation, no items such as floor or ceiling trim, pictures, window sill, etc, should be in the area of the elevator or hatch flange. We recommend at least 1" from any obstruction to the hatch flange.

TITLE: ASCENDA TFL-XL A			SCALE: NONE
DRAWN BY: DRAWN_BY	DATE: DRAWN_DATE	DRAWING NO.: DRAWING_NO	REV: REV_NO
JOB INFORMATION: JOB_REFERENCE JOB_ADDRESS JOB_CITY_ST_ZIP			

REVISION HISTORY				
ZONE	REV	DESCRIPTION	DATE	APPROVED
1	A	4-M8->2-M8	2025/11/26	Andy

Walls of bricks, terra-cotta, hollow blocks,and similar materials shall not be used for attachment of guide-rail brackets unless ,they are adequately reinforced.pull out force 1300N

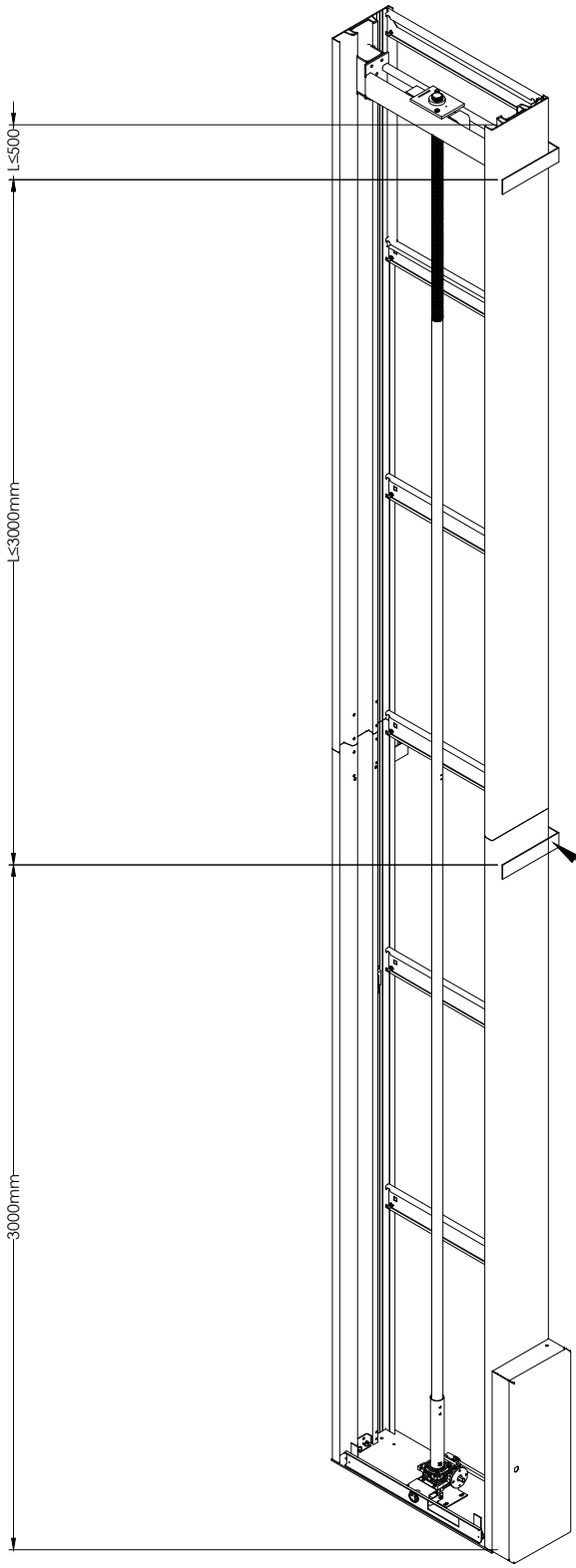

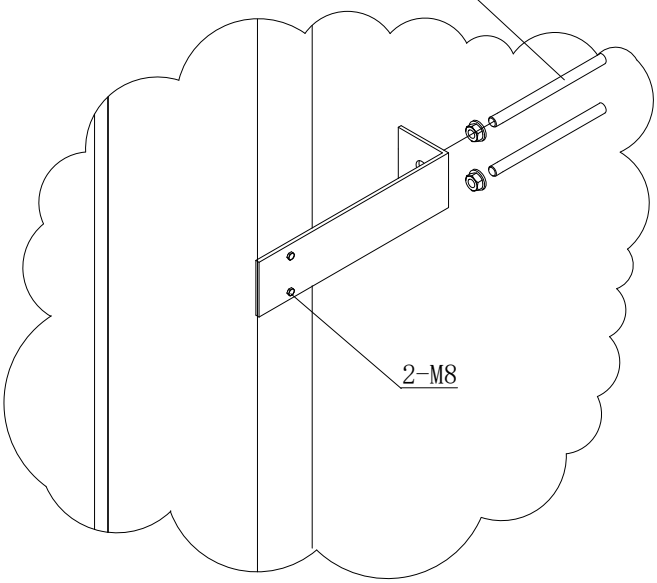

A

1300N in total per side,
2600N per fixing area
See detail A

TITLE: ASCENDA TFL-XL A			SCALE
DRAWN BY	DATE	DRAWING NO.	REV: A
JOB INFORMATION			

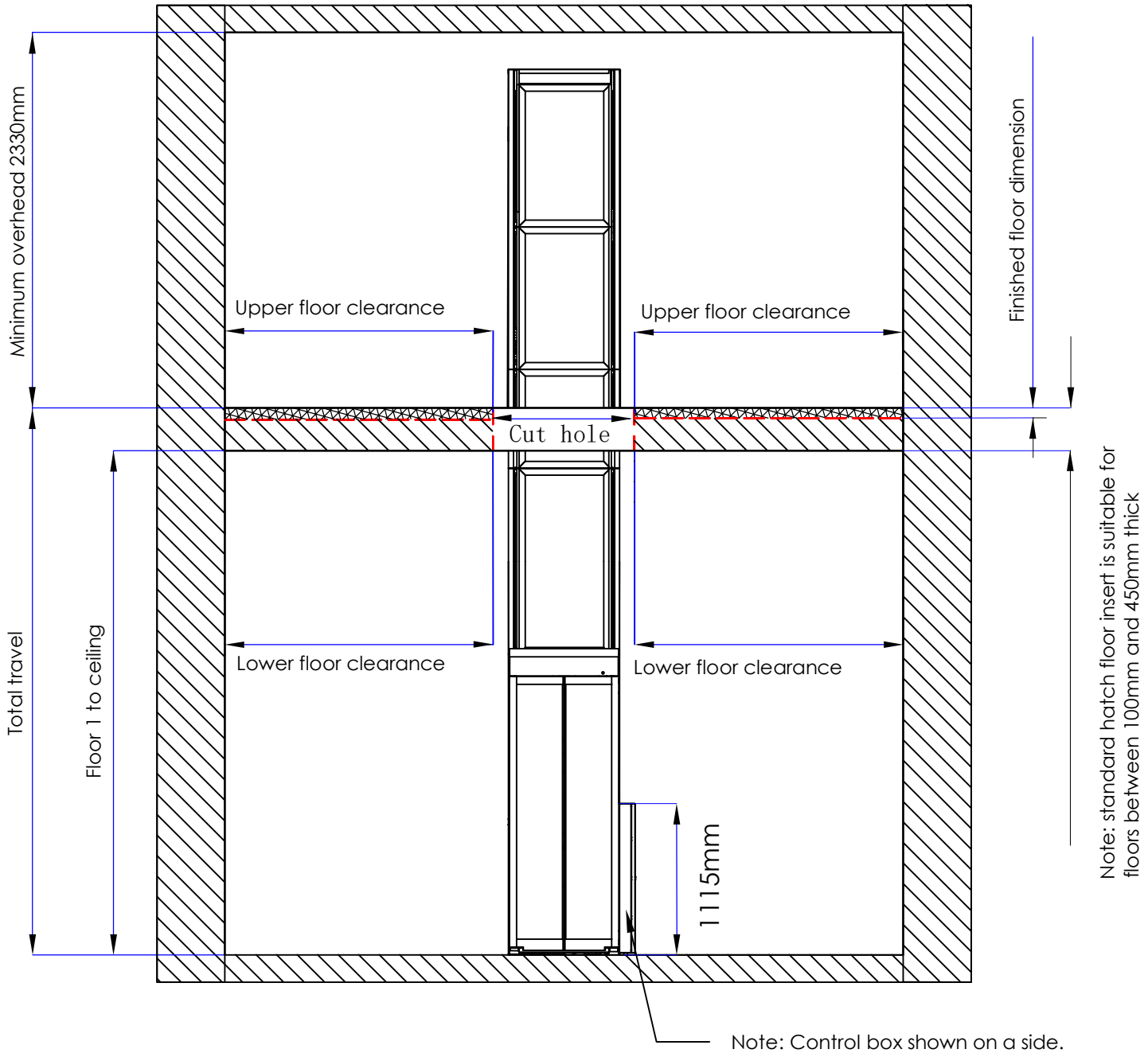

Note: Control box shown on a side.
Standard tower mounted controller requires a minimum lower floor area clearance of 920mm on control box side.

Notes:

1) Consult local authority to ensure compliance with state and local codes.
2) Maximum travel is 4270mm
3) Minimum floor 1 to ceiling measurement is 2150mm
4) Upper floor clearance is 40mm - 100 or greater than 300mm
5) Lower floor clearance is 19mm - 100mm or greater than 300mm
6) Overhead notes:
   - Minimum overhead is 2330mm with standard equipment
   - Engineering review is required if overhead exceeds 2550mm

Job specific information:

	OVERHEAD
	TOTAL TRAVEL FLOOR 1 TO 2

TITLE: ASCENDA TFL-XL A			SCALE: NONE
DRAWN BY: DRAWN_BY	DATE: DRAWN_DATE	DRAWING NO.: DRAWING_NO	REV: REV_NO
JOB INFORMATION: JOB_REFERENCE JOB_ADDRESS JOB_CITY_ST_ZIP			

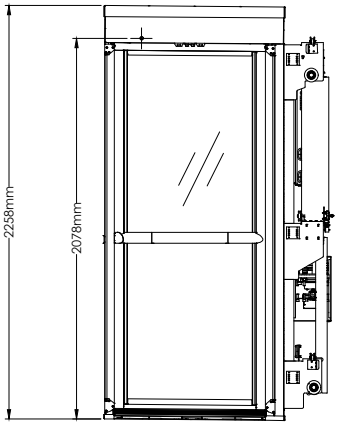

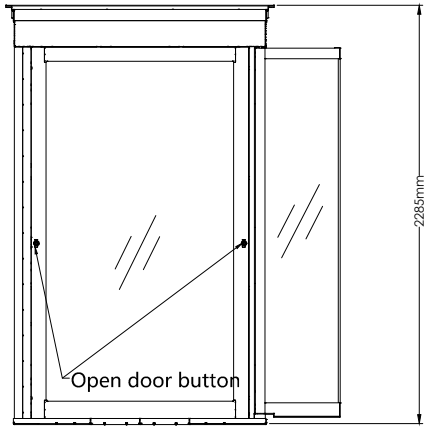

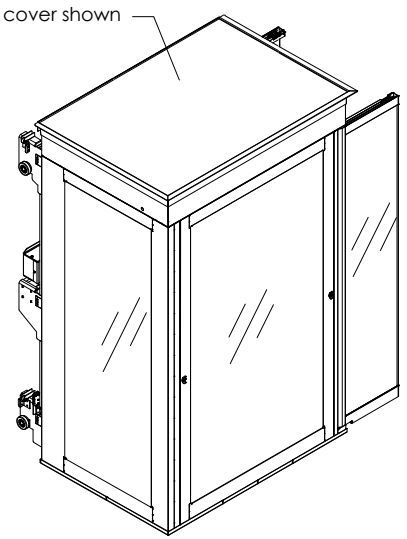

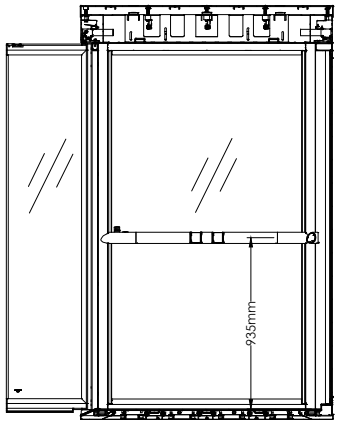

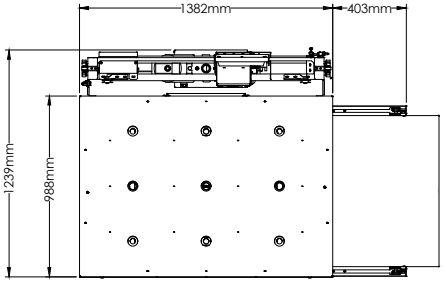

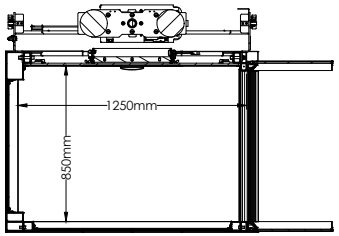

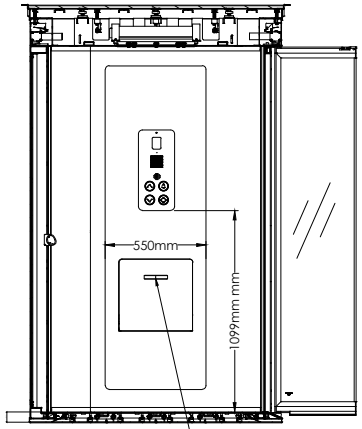

When folded down the seat dimensions are：400mm X 315mm (WXD)
Seat maximum load capacity is 150kg

TITLE: ASCENDA TFL-XL A			SCALE: NONE
DRAWN BY: DRAWN_BY	DATE: DRAWN_DATE	DRAWING NO.: DRAWING_NO	REV: REV_NO
JOB INFORMATION: JOB_REFERENCE JOB_ADDRESS JOB_CITY_ST_ZIP			

OPTIONAL CONTROLLER LOCATIONS

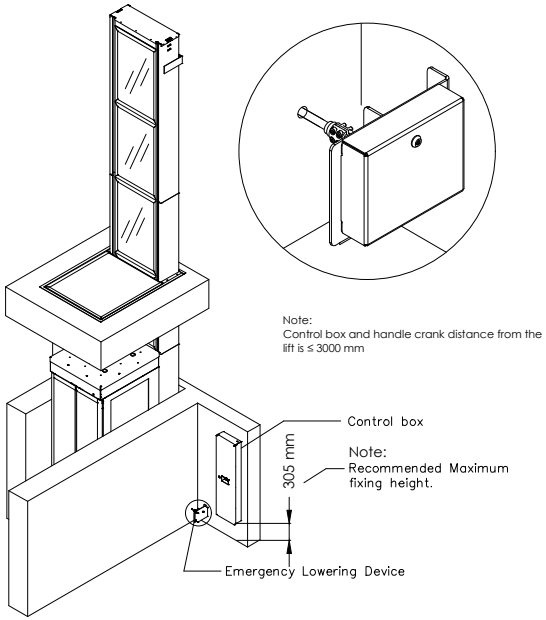

Configuration 1

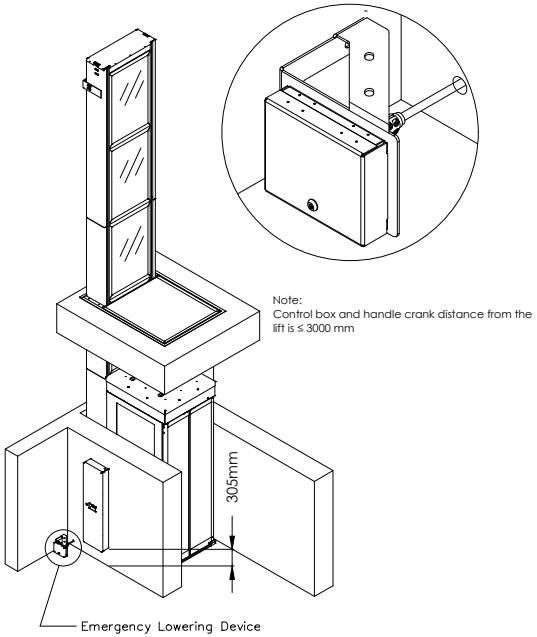

Configuration 2

NOTE:
The maximum number bends is two.

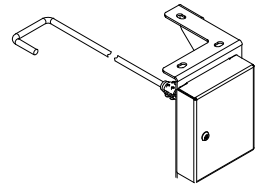

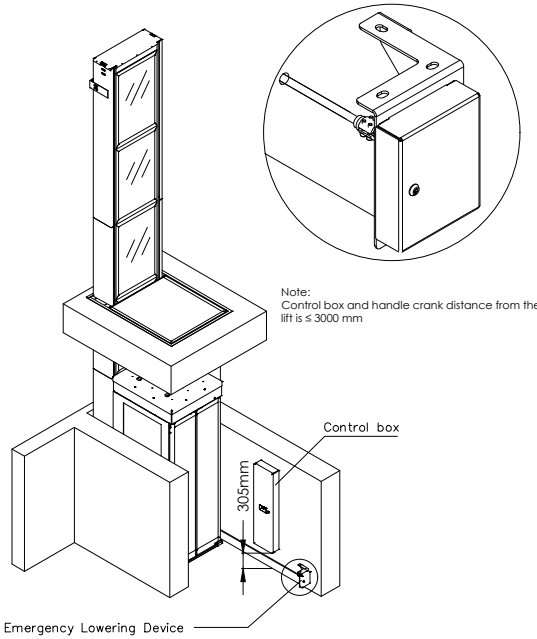

Configuration 3

TITLE: ASCENDA TFL-XL A			SCALE: NONE
DRAWN BY: DRAWN_BY	DATE: DRAWN_DATE	DRAWING NO.: DRAWING_NO	REV: REV_NO
JOB INFORMATION: JOB_REFERENCE JOB_ADDRESS JOB_CITY_ST_ZIP			

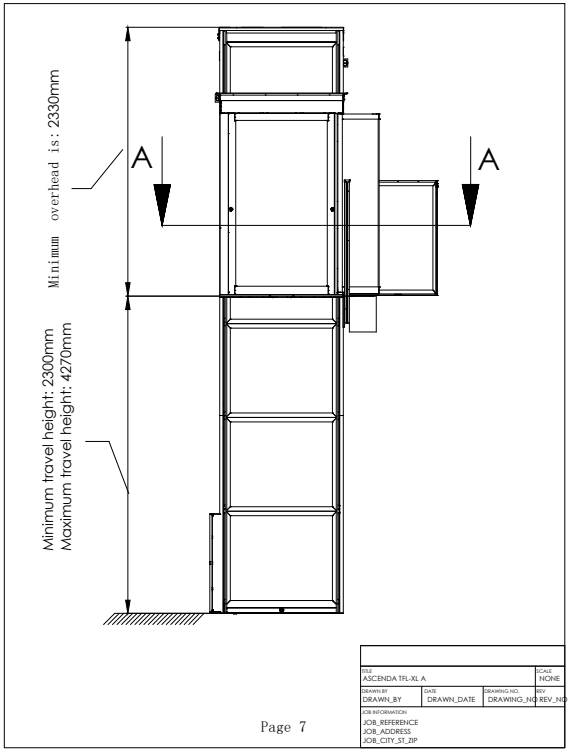

TITLE: ASCENDA TFL-XL A			SCALE: NONE
DRAWN BY: DRAWN_BY	DATE: DRAWN_DATE	DRAWING NO.: DRAWING_NO	REV: REV_NO
JOB INFORMATION: JOB_REFERENCE JOB_ADDRESS JOB_CITY_ST_ZIP			

OPTIONAL LANDING GATE

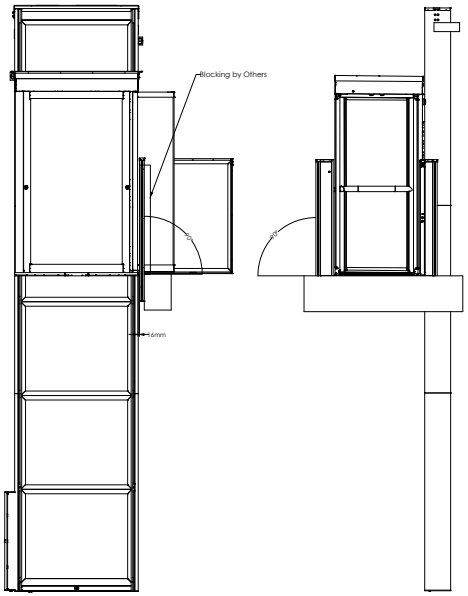

TITLE: ASCENDA TFL-XL A			SCALE: NONE
DRAWN BY: DRAWN_BY	DATE: DRAWN_DATE	DRAWING NO.: DRAWING_NO	REV: REV_NO
JOB INFORMATION: JOB_REFERENCE JOB_ADDRESS JOB_CITY_ST_ZIP			

OPTIONAL LANDING GATE

CASE 1:A-A (1 : 1)

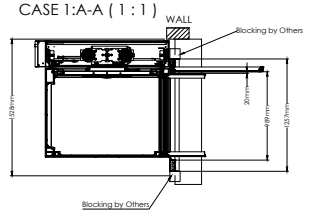

CASE 2:A-A (1 : 1)

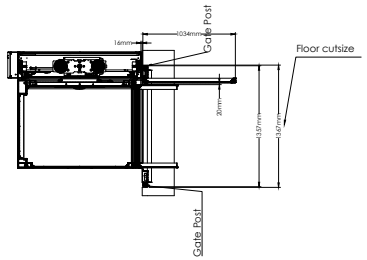

Required cuts by others

Gate support posts are suitable for masonry construction only an should not be used for non-masonry construction.

TITLE: ASCENDA TFL-XL A			SCALE: NONE
DRAWN BY: DRAWN_BY	DATE: DRAWN_DATE	DRAWING NO.: DRAWING_NO	REV: REV_NO
JOB INFORMATION: JOB_REFERENCE JOB_ADDRESS JOB_CITY_ST_ZIP			

OPTIONAL LANDING GATE

Ascenda size "XL-AC" elevator specifications

General:

- Travel: xxx
- Overhead: xxx
- Speed: 0.15m/s
- Load capacity: 350kg
- Stops: two
- Double opening (AC side)

Car features:

- 1250mm x 850mm car size
- 1999mm interior car height
- White/black texture powder coated cab with clear laminated safety glass vision panels
- 1 handrail (One with integrated control)
- Black car accent strip
- Charcoal forgo flooring
- Energy saving recessed led light with silver trim rings
- 1990mm clear laminated safety glass saloon doors
- Flip down seat

Fixtures:

- Black acrylic car operating panel (cop) with with integrated keypad phone and status display, up/down arrow buttons, and alarm button
- Silver aluminum handrail with controls, up/down arrow buttons, door open button, in car emergency stop button and fan knob
- Wireless hall stations with up/down arrow buttons and door open button

Mechanical equipment:

- Modular extruded aluminum rail structure
- Car frame assembly
- 24 mm pitch screw drive system
- Integrated frequency inverter drive synchronous motor

Electrical:

- 1PH, 208V - 240V, 50/60HZ, 32A

Safety devices:

- Safety nut
- Belt monitor
- One upper and one lower final limits
- In-car emergency stop switch and alarm
- Car door locking device for car gate(s)
- Battery back up emergency car light and alarm
- Top car obstruction safety device
- Bottom car obstruction safety device
- Hatch obstruction safety device
- Battery lowering system
- Overload sensor
- Manual lowering device

Controls:

- Hold to run
- Self diagnostic system with diagnostic led

Optional included features:

- Iot module - wi-fi and sim card
- Embedded tower led light strip
- Integrated fan
- Mirror finish ceiling
- Control buttons - dual color
- Accent car panel with recessed light
- Control box location: a side/c side/remote (2 bends maximum)

TITLE: ASCENDA TFL-XL A/C			SCALE: NONE
DRAWN BY: DRAWN_BY	DATE: DRAWN_DATE	DRAWING NO.: DRAWING_NO	REV: REV_NO
JOB INFORMATION: JOB_REFERENCE JOB_ADDRESS JOB_CITY_ST_ZIP			

Section force (include rated load): 14385.5 (N)
Section area: 0.4 m²
Force per square meter: 35964 (N/m²)

Note:
If a framework contractor is used, the external dimensions will increase by 6mm,
Construction needs to be adjusted according to the actual situation to meet the tolerance of+/-3mm for finished openings, squares, and dimensions

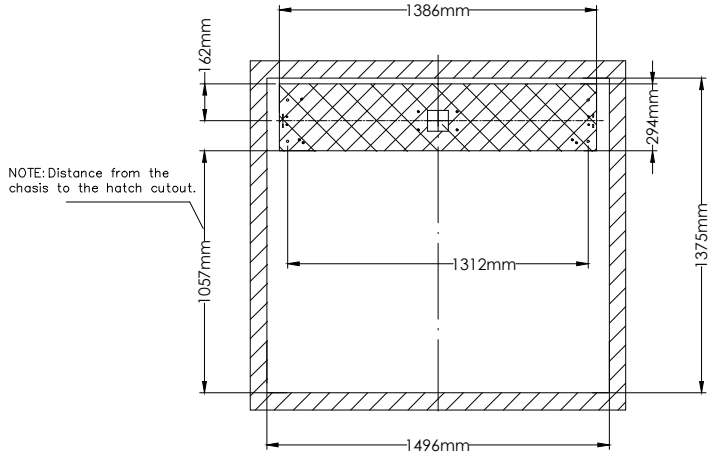

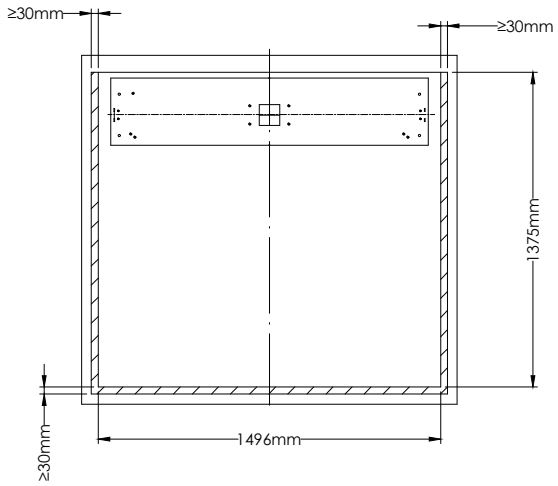

B

C

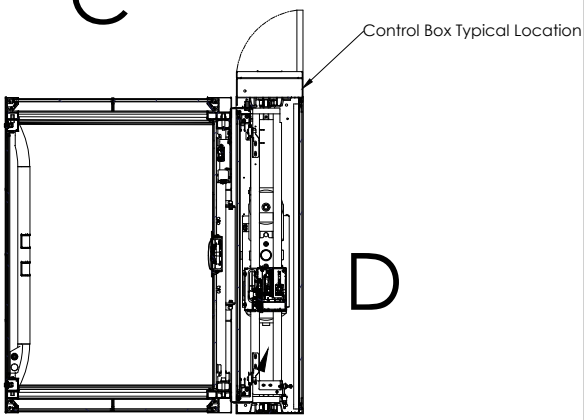

D

A

* The hatch flange will rest on the upper landing finished floor.

Crash warning: to ensure unobstructed operation, no items such as floor or ceiling trim, pictures, window sill, etc, should be in the area of the elevator or hatch flange. We recommend at least 1" from any obstruction to the hatch flange.

TITLE: ASCENDA TFL-XL A/C			SCALE: NONE
DRAWN BY: DRAWN_BY	DATE: DRAWN_DATE	DRAWING NO.: DRAWING_NO	REV: REV_NO
JOB INFORMATION: JOB_REFERENCE JOB_ADDRESS JOB_CITY_ST_ZIP			

REVISION HISTORY				
ZONE	REV	DESCRIPTION	DATE	APPROVED
1	A	4-M8->2-M8	2025/11/26	Andy

Walls of bricks, terra-cotta, hollow blocks,and similar materials shall not be used for attachment of guide-rail brackets unless ,they are adequately reinforced.pull out force 1300N

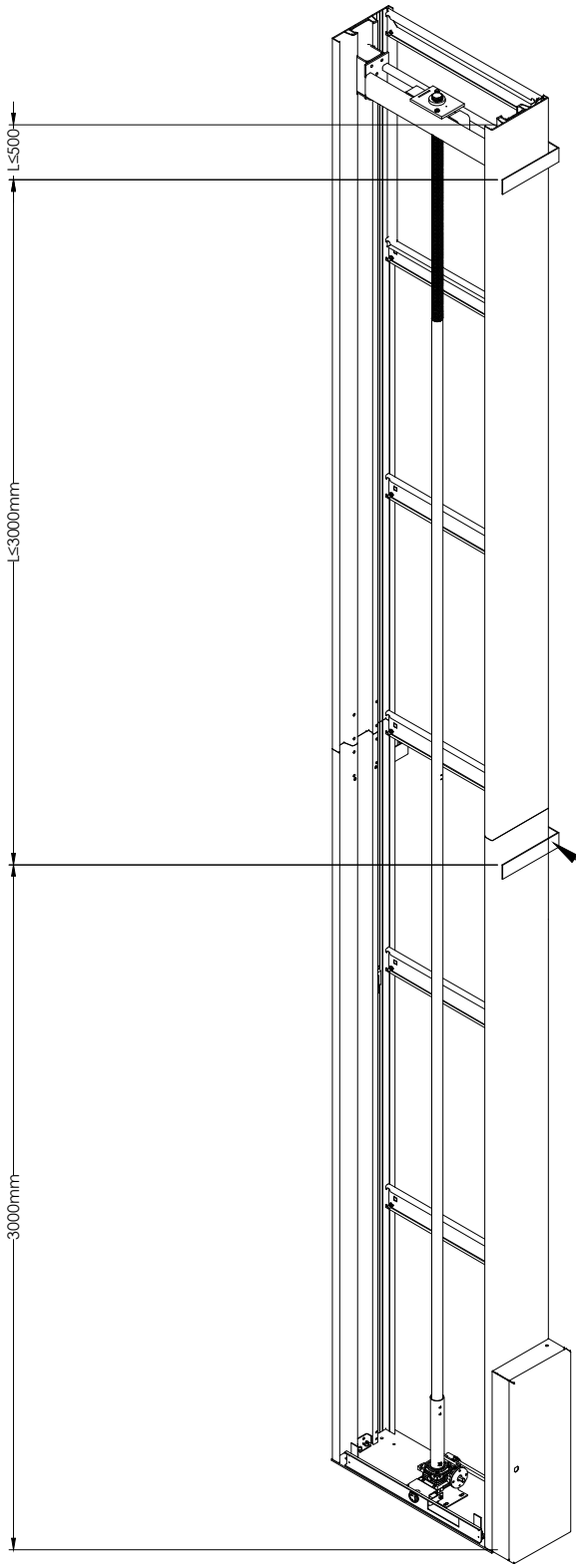

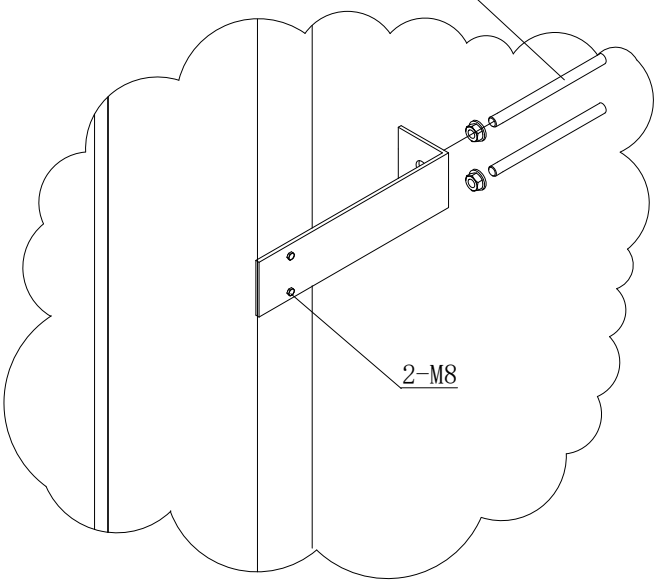

A

1300N in total per side,
2600N per fixing area
See detail A

TITLE: ASCENDA TFL-XL AC			SCALE
DRAWN BY	DATE	DRAWING NO.	REV: A
JOB INFORMATION			

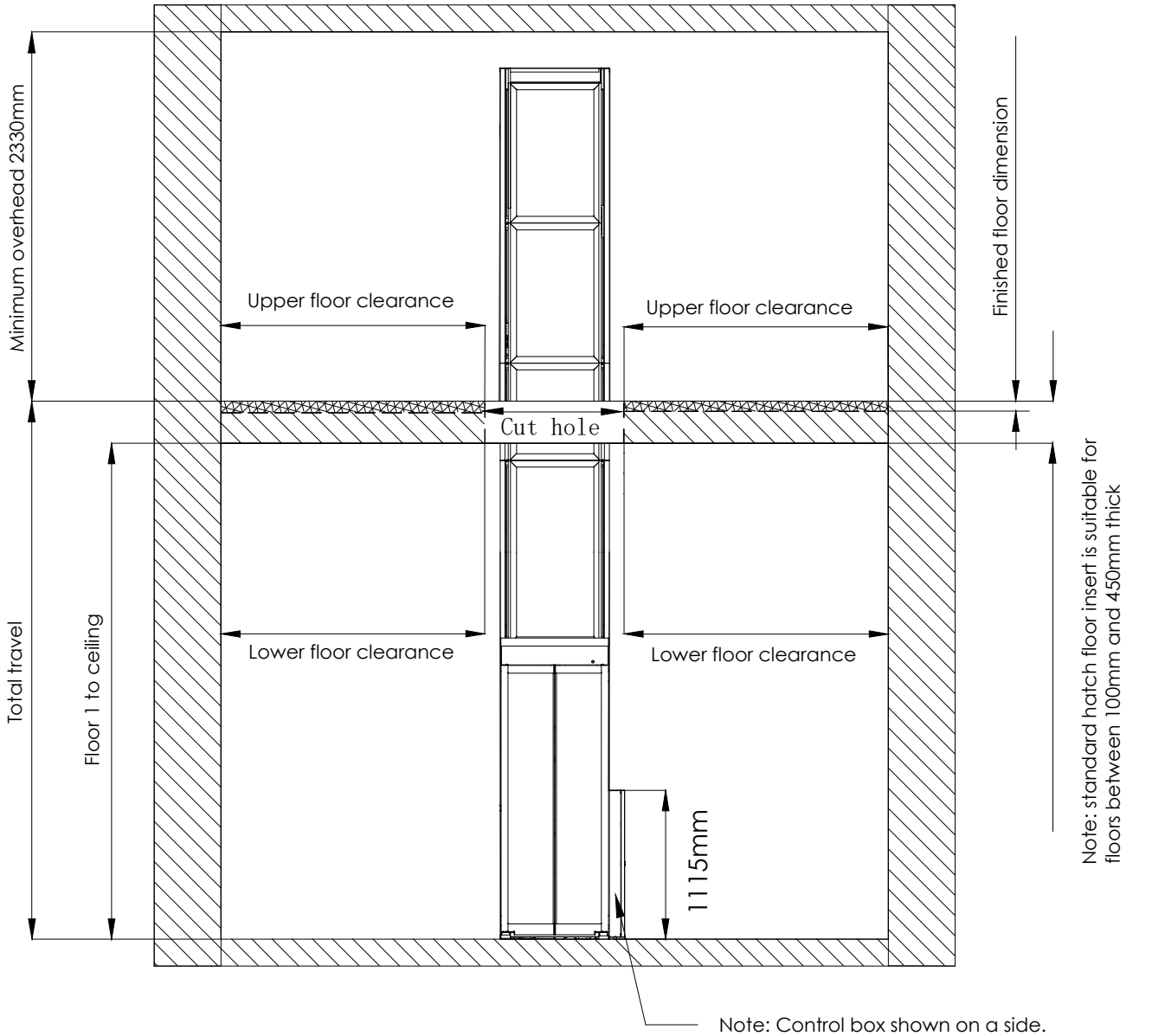

Notes:

1) Consult local authority to ensure compliance with state and local codes.
2) Maximum travel is 4270mm
3) Minimum floor 1 to ceiling measurement is 2150mm
4) Upper floor clearance is 40mm - 100 or greater than 300mm
5) Lower floor clearance is 19mm - 100mm or greater than 300mm
6) Overhead notes:
   - Minimum overhead is 2330mm with standard equipment
   - Engineering review is required if overhead exceeds 2550mm

Job specific information:

	OVERHEAD
	TOTAL TRAVEL FLOOR 1 TO 2

TITLE: ASCENDA TFL-XL A/C			SCALE: NONE
DRAWN BY: DRAWN_BY	DATE: DRAWN_DATE	DRAWING NO.: DRAWING_NO	REV: REV_NO
JOB INFORMATION: JOB_REFERENCE JOB_ADDRESS JOB_CITY_ST_ZIP			

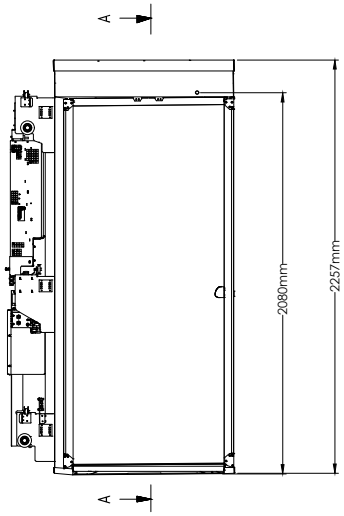

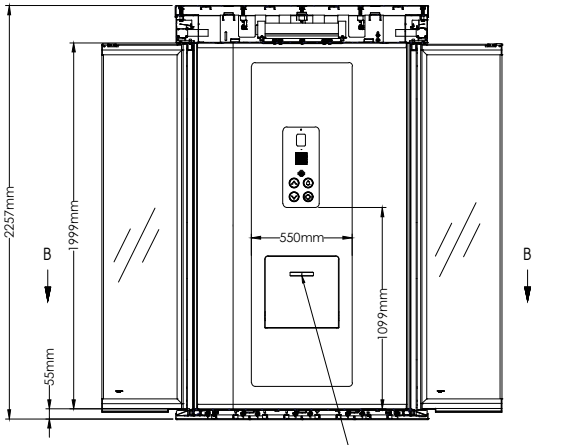

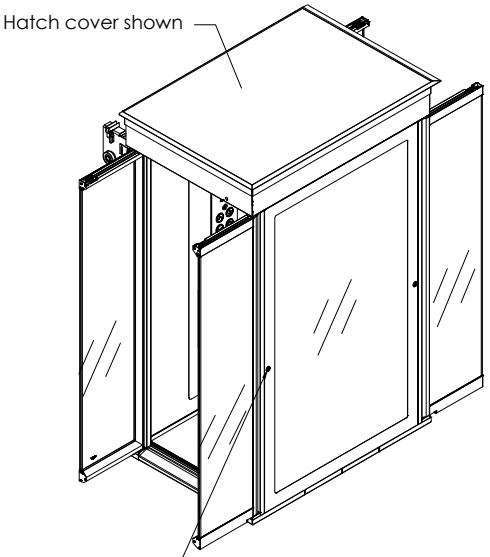

A-A (1 : 1)

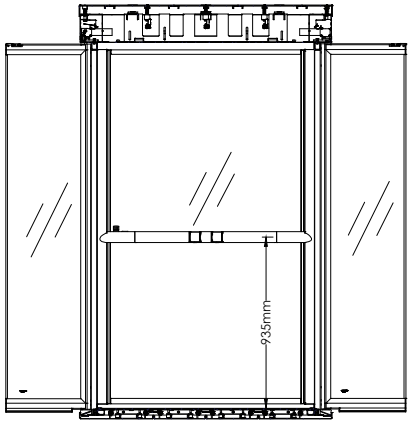

B-B (1 : 1)

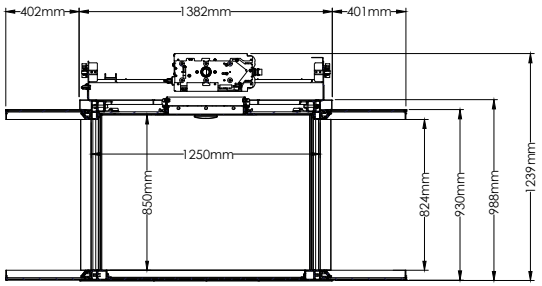

When folded down the seat dimensions are：400mm X 315mm (WXD)
Seat maximum load capacity is 150kg

TITLE: ASCENDA TFL-XL A/C			SCALE: NONE
DRAWN BY: DRAWN_BY	DATE: DRAWN_DATE	DRAWING NO.: DRAWING_NO	REV: REV_NO
JOB INFORMATION: JOB_REFERENCE JOB_ADDRESS JOB_CITY_ST_ZIP			

OPTIONAL CONTROLLER LOCATIONS

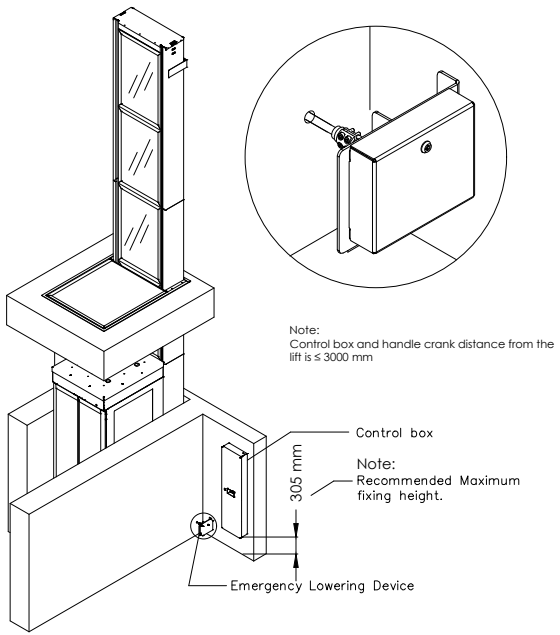

Configuration 1

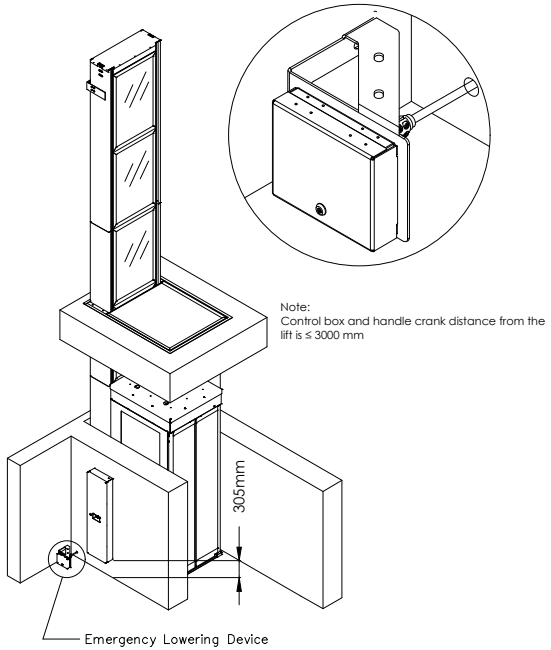

Configuration 2

NOTE:
The maximum number bends is two.

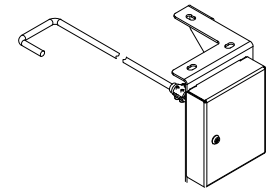

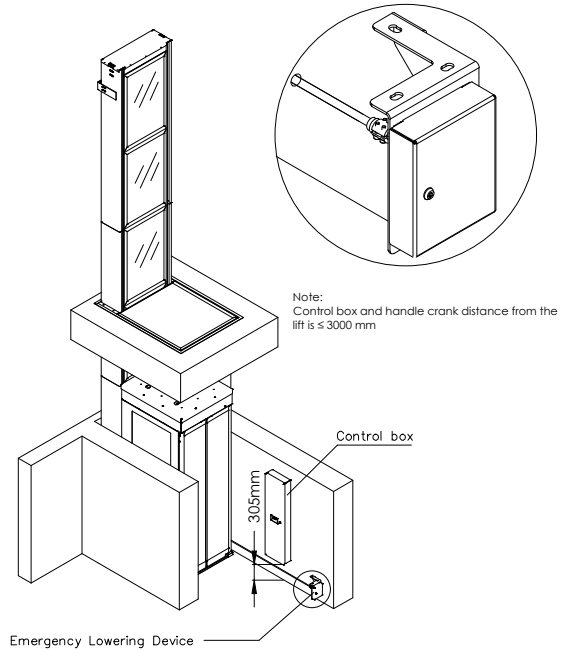

Configuration 3

TITLE: ASCENDA TFL-XL A/C			SCALE: NONE
DRAWN BY: DRAWN_BY	DATE: DRAWN_DATE	DRAWING NO.: DRAWING_NO	REV: REV_NO
JOB INFORMATION: JOB_REFERENCE JOB_ADDRESS JOB_CITY_ST_ZIP			

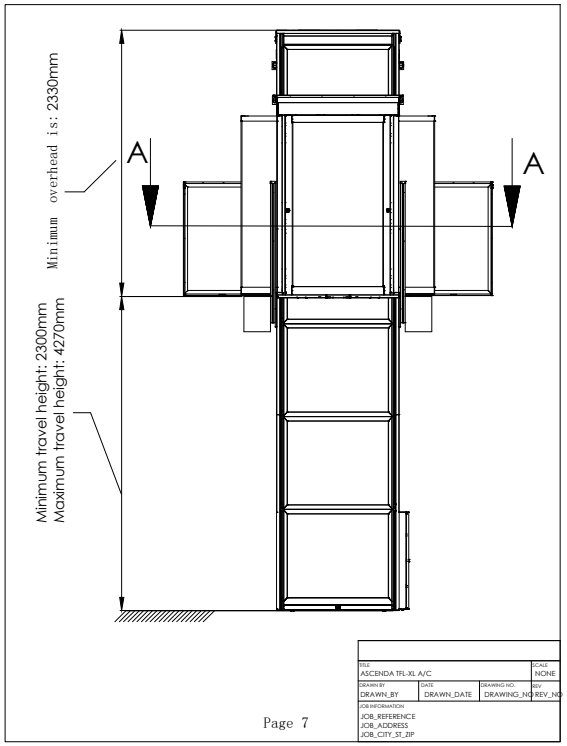

Page 7

OPTIONAL LANDING GATE

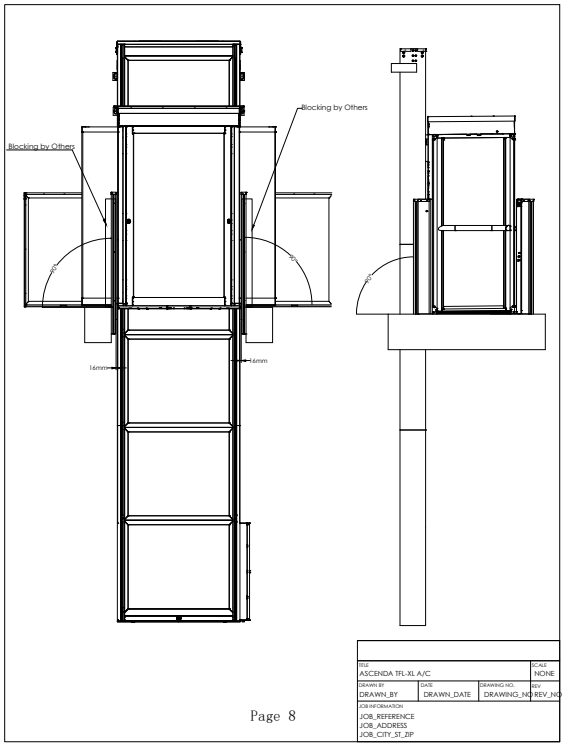

Page 8

OPTIONAL LANDING GATE

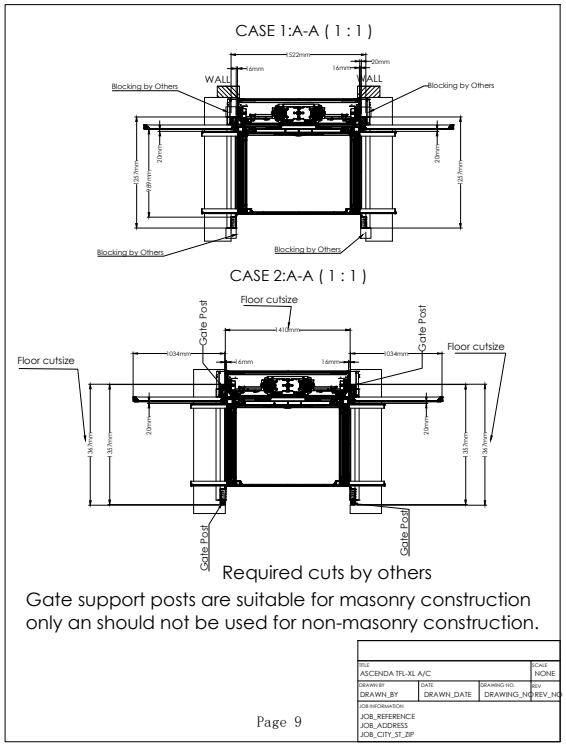

Gate support posts are suitable for masonry construction only an should not be used for non-masonry construction.

Page 9

OPTIONAL LANDING GATE